Attachment 1

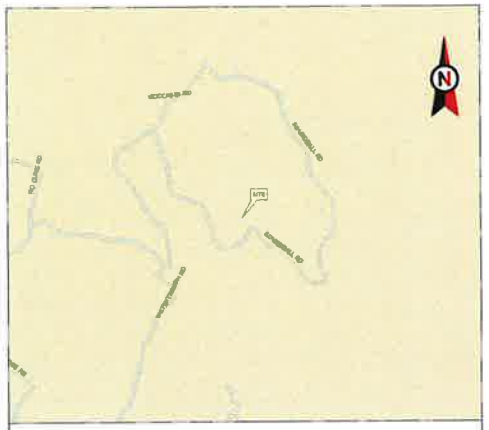

VICINITY MAP

AMERICAN TOWER®

ATC SITE NAME: WALKER RIDGE
ATC SITE NUMBER: 89390
T-MOBILE SITE NAME: ATC: WALKER RIDGE
T-MOBILE SITE NUMBER: BA90390A
SITE ADDRESS: 1135 WATERTROUGH ROAD
CLEARLAKE OAKS,
CA 95423-8575

SITE CLASS: SELF SUPPORT TOWER
T-MOBILE COVERAGE STRATEGY COLLOCATION PLAN
67E5998E_1XAIR+1OP CONFIGURATION

LOCATION MAP

COMPLIANCE CODE

ALL WORK SHALL BE PERFORMED AND MATERIALS INSTALLED IN ACCORDANCE WITH THE CURRENT EDITIONS OF THE FOLLOWING CODES AS ADOPTED BY THE LOCAL GOVERNMENT AUTHORITIES. NOTHING IN THESE PLANS IS TO BE CONSTRUED TO PERMIT WORK NOT CONFORMING TO THESE CODES.

1. 2022 CALIFORNIA ADMINISTRATIVE CODE
2. 2022 CALIFORNIA BUILDING CODE
3. 2022 CALIFORNIA RESIDENTIAL CODE
4. 2022 CALIFORNIA ELECTRICAL CODE
5. 2022 CALIFORNIA PLUMBING CODE
6. 2022 CALIFORNIA ENERGY CODE
7. 2022 CALIFORNIA FIRE CODE
8. 2022 CALIFORNIA EXISTING BUILDING CODE
9. 2021 INTERNATIONAL BUILDING CODE (IBC)
10. LOCAL BUILDING CODE
11. CITY/COUNTY ORDINANCES

UTILITY COMPANIES

POWER COMPANY: PACIFIC GAS & ELECTRIC-NECU
PHONE: (415) 973-1000

TELEPHONE COMPANY: AT&T
PHONE: (800) 331-0500

811 Know what's below. Call before you dig.

PROJECT SUMMARY

SITE ADDRESS

1135 WATERTROUGH ROAD
CLEARLAKE OAKS, CA 95423-8575
COUNTY: LAKE

GEOGRAPHIC COORDINATES

LATITUDE: 39.0375
LONGITUDE: -122.4952
GROUND ELEVATION: 2,730' AMSL

ZONING INFORMATION:

JURISDICTION: LAKE COUNTY
PARCEL ID: 62812004

PROJECT TEAM

TOWER OWNER:
AMERICAN TOWER
10 PRESIDENTIAL WAY
WOBURN, MA 01801

APPLICANT:
T-MOBILE
1200 CONCORD AVE., SUITE 500
CONCORD, CA 94520

ENGINEER:
TOWER ENGINEERING PROFESSIONALS
326 TRYON ROAD
RALEIGH, NC 27603-3530

PROPERTY OWNER:
REIMER GEORGE GARY & MIEDEL MARTINA TRUSTEE
1640 SOUTH LAKELINE DRIVE
SALT LAKE CITY, UT 84109

PROJECT LOCATION DIRECTIONS

FROM T-MOBILE LOCAL OFFICE 1200 CONCORD AVE., SUITE 500: GET ON I-680 N FROM CONCORD AVE AND FOLLOW I-680 N, I-80 E AND I-505 N TO CA-16 W IN YOLO COUNTY. TAKE EXIT 21 FROM I-505 N THEN CONTINUE ON CA-16 W. TAKE CA-20 W TO WATERTROUGH RD IN LAKE COUNTY.

PROJECT DESCRIPTION

THE PROPOSED PROJECT INCLUDES MODIFYING GROUND BASED AND TOWER MOUNTED EQUIPMENT AS INDICATED PER BELOW:

TOWER WORK:
INSTALL (3) VFA10-HD SECTOR MOUNT(S), (3) RRU DUAL SWIVEL MOUNT(S), (1) VHLP3-11W/A MICROWAVE DISH(ES), (1) FIBEAR IP-20D-HP ODU(s), (3) APXVAALL24_43-U-NA20 ANTENNA(S), (3) AIR 6419 B41 ANTENNA(S), (3) RADIO 4480 B71+B85A RRU(s), (3) RADIO 4460 B25+B66 RRU(s), (1) 0.35" FIBER CABLE(S), (1) 0.38" CONTROL CABLE(S), (1) 2" INNERDUCT(S), AND (3) 6/24 4AWG HYBRID TRUNK 30M(s).

GROUND WORK:
INSTALL (1) ENCLOSURE 6160 AC V1 CABINET(S), (1) ENCLOSURE B160 CABINET(S), (12) NORTHSTAR NSB 190FT RED BATTERY(IES), (1) PURCELL RAC 24 CABINET(S), (1) 225A PPC(s), (1) TELCO BOX(ES), (1) FIBER WINDER BOX(ES), (1) GPS ANTENNA(S), (1) METER(S), (1) DISCONNECT(S), (2) RP 6651(s), (1) CSR IXRE V2(s), AND UNDERGROUND CONDUIT(S) IN JOINT TRENCH.

PROJECT NOTES

1. THE FACILITY IS UNMANNED.
2. A TECHNICIAN WILL VISIT THE SITE APPROXIMATELY ONCE A MONTH FOR ROUTINE INSPECTION AND MAINTENANCE.
3. THE PROJECT WILL NOT RESULT IN ANY SIGNIFICANT LAND DISTURBANCE OR EFFECT OF STORM WATER DRAINAGE.
4. NO SANITARY SEWER, POTABLE WATER OR TRASH DISPOSAL IS REQUIRED.
5. HANDICAP ACCESS IS NOT REQUIRED.
6. THE PROJECT DEPICTED IN THESE PLANS QUALIFIES AS AN ELIGIBLE FACILITIES REQUEST ENTITLED TO EXPEDITED REVIEW UNDER 47 U.S.C. § 1455(A) AS A MODIFICATION OF AN EXISTING WIRELESS TOWER THAT INVOLVES THE COLLOCATION, REMOVAL, AND/OR REPLACEMENT OF TRANSMISSION EQUIPMENT THAT IS NOT A SUBSTANTIAL CHANGE UNDER CFR § 1.61000 (B)(7).

SHEET INDEX

SHEET NO:	DESCRIPTION:	REV:	DATE:	BY:
G-001	TITLE SHEET	1	12/29/23	SSP
G-002	GENERAL NOTES	0	11/29/23	RMJ
C-001	OVERALL SITE PLAN	1	12/29/23	SSP
C-101	DETAILED SITE PLAN	1	12/29/23	SSP
C-102	DETAILED EQUIPMENT LAYOUT	0	11/29/23	RMJ
C-201	TOWER ELEVATION	1	12/29/23	SSP
C-401	ANTENNA INFORMATION & SCHEDULE	1	12/29/23	SSP
C-501	CONSTRUCTION DETAILS	1	12/29/23	SSP
C-502	CONSTRUCTION DETAILS	1	12/29/23	SSP
C-503	CONSTRUCTION DETAILS	0	11/29/23	RMJ
E-101	GROUNDING DETAILS & ELECTRICAL SCHEMATIC	0	11/29/23	RMJ
E-501	GROUNDING DETAIL	0	11/29/23	RMJ
E-601	PANEL SCHEDULE & ONE-LINE DIAGRAM	0	11/29/23	RMJ
R-601	SUPPLEMENTAL			
R-602	SUPPLEMENTAL			
R-603	SUPPLEMENTAL			
R-604	SUPPLEMENTAL			
R-605	SUPPLEMENTAL			
R-606	SUPPLEMENTAL			
R-607	SUPPLEMENTAL			
R-608	SUPPLEMENTAL			

AMERICAN TOWER®

TOWER ENGINEERING PROFESSIONALS
326 TRYON ROAD
RALEIGH, NC 27603-3530
OFFICE: (919) 661-6351
www.tepgroup.net

REV.	DESCRIPTION	BY	DATE
A	PRELIMINARY	KKP	10/26/23
0	100% CONSTRUCTION	RMJ	11/29/23
1	100% CONSTRUCTION	SSP	12/29/23

ATC SITE NUMBER:
89390
ATC SITE NAME:
WALKER RIDGE
T-MOBILE SITE NAME
ATC: WALKER RIDGE
SITE ADDRESS:
1135 WATERTROUGH ROAD
CLEARLAKE OAKS, CA 95423-8575

SEAL:

REGISTERED PROFESSIONAL ENGINEER ANDREW T. HADANE 77502 EXP. 06-30-25 CIVIL STATE OF CALIFORNIA

12/29/23

T-Mobile

DATE DRAWN:	12/29/23
ATC JOB NO.	14250960
CUSTOMER NAME:	ATC: WALKER RIDGE
CUSTOMER ID.	BA90390A

TITLE SHEET

SHEET NUMBER: G-001
REVISION: 1

GENERAL CONSTRUCTION NOTES:

1. OWNER FURNISHED MATERIALS, T-MOBILE "THE COMPANY" WILL PROVIDE AND THE CONTRACTOR WILL INSTALL
   - A. BTS EQUIPMENT FRAME (PLATFORM) AND ICEBRIDGE SHELTER (GROUND BUILDCD-LOCATE ONLY)
   - B ACTELCO INTERFACE BOX (PPC)
   - C. ICE BRIDGE (CABLE TRAY WITH COVER) (GROUND BUILDICO-LOCATE ONLY, GC TO FURNISH AND INSTALL FOR ROOFTOP INSTALLATION)
   - D. TOWERS, MONOPOLES
   - E. TOWER LIGHTING
   - F. GENERATORS & LIQUID PROPANE TANK
   - G. ANTENNA STANDARD BRACKETS, FRAMES AND PIPES FOR MOUNTING
   - H. ANTENNAS (INSTALLED BY OTHERS)
   - I. TRANSMISSION LINE
   - J. TRANSMISSION LINE JUMPERS
   - K. TRANSMISSION LINE CONNECTORS WITH WEATHERPROOFING KITS
   - L. TRANSMISSION LINE GROUND KITS
   - M. HANGERS
   - N. HOISTING GRIPS
   - O. BTS EQUIPMENT
2. THE CONTRACTOR IS RESPONSIBLE TO PROVIDE ALL OTHER MATERIALS FOR THE COMPLETE INSTALLATION OF THE SITE INCLUDING, BUT NOT LIMITED TO, SUCH MATERIALS AS FENCING, STRUCTURAL STEEL SUPPORTING SUB-FRAME FOR PLATFORM, ROOFING LABOR AND MATERIALS, GROUNDING RINGS, GROUNDING WIRES COPPER-CLAD OR X'T CHEMICAL GROUND ROD(S), BUSS BARS, TRANSFORMERS AND DISCONNECT SWITCHES WHERE APPLICABLE, TEMPORARY ELECTRICAL POWER CONDUIT, LANDSCAPING COMPOUND STONE, CRANES, CORE DRILLING, SLEEPERS AND RUBBER MATTING, REBAR, CONCRETE CAISSONS, PADS AND/OR AUGER MOUNTS, MISCELLANEOUS FASTENERS, CABLE TRAYS, NON-STANDARD ANTENNA FRAMES AND ALL OTHER MATERIAL AND LABOR REQUIRED TO COMPLETE THE JOB ACCORDING TO THE DRAWINGS AND SPECIFICATIONS. IT IS THE POSITION OF T-MOBILE TO APPLY FOR PERMITTING AND CONTRACTOR RESPONSIBLE FOR PICKUP AND PAYMENT OF REQUIRED PERMITS
3. ALL WORK SHALL CONFORM TO ALL CURRENT APPLICABLE FEDERAL, STATE, AND LOCAL CODES INCLUDING ANSI/EIA/TIA-222 AND COMPLY WITH ATC CONSTRUCTION SPECIFICATIONS.
4. CONTRACTOR SHALL CONTACT LOCAL 811 FOR IDENTIFICATION OF UNDERGROUND UTILITIES PRIOR TO START OF CONSTRUCTION
5. CONTRACTOR SHALL BE RESPONSIBLE FOR COORDINATING ALL REQUIRED INSPECTIONS
6. ALL DIMENSIONS TO, OF, AND ON EXISTING BUILDINGS, DRAINAGE STRUCTURES AND SITE IMPROVEMENTS SHALL BE VERIFIED IN FIELD BY CONTRACTOR WITH ALL DISCREPANCIES REPORTED TO THE ENGINEER
7. DO NOT CHANGE SIZE OR SPACING OF STRUCTURAL ELEMENTS
8. DETAILS SHOWN ARE TYPICAL, SIMILAR DETAILS APPLY TO SIMILAR CONDITIONS UNLESS OTHERWISE NOTED.
9. THESE DRAWINGS DO NOT INCLUDE NECESSARY COMPONENTS FOR CONSTRUCTION SAFETY WHICH SHALL BE THE SOLE RESPONSIBILITY OF THE CONTRACTOR.
10. CONTRACTOR SHALL BRACE STRUCTURES UNTIL ALL STRUCTURAL ELEMENTS NEEDED FOR STABILITY ARE INSTALLED. THESE ELEMENTS ARE AS FOLLOWS: LATERAL BRACING, ANCHOR BOLTS, ETC
11. CONTRACTOR SHALL DETERMINE EXACT LOCATION OF EXISTING UTILITIES, GROUNDS DRAINS, DRAIN PIPES, VENTS, ETC. BEFORE COMMENCING WORK.
12. INCORRECTLY FABRICATED, DAMAGED, OR OTHERWISE MISFITTING OR NONCONFORMING MATERIALS OR CONDITIONS SHALL BE REPORTED TO THE T-MOBILE REP PRIOR TO REMEDIAL OR CORRECTIVE ACTION. ANY SUCH REMEDIAL ACTION SHALL REQUIRE WRITTEN APPROVAL BY THE T-MOBILE REP PRIOR TO PROCEEDING
13. EACH CONTRACTOR SHALL COOPERATE WITH THE T-MOBILE REP, AND COORDINATE HIS WORK WITH THE WORK OF OTHERS
14. CONTRACTOR SHALL REPAIR ANY DAMAGE CAUSED BY CONSTRUCTION OF THIS PROJECT TO MATCH EXISTING PRE-CONSTRUCTION CONDITIONS TO THE SATISFACTION OF THE T-MOBILE CONSTRUCTION MANAGER
15. ALL CABLE/CONDUIT ENTRY/EXIT PORTS SHALL BE WEATHERPROOFED DURING INSTALLATION USING A SILICONE SEALANT.
16. WHERE EXISTING CONDITIONS DO NOT MATCH THOSE SHOWN IN THIS PLAN SET, CONTRACTOR SHALL NOTIFY THE T-MOBILE REP AND ENGINEER OF RECORD IMMEDIATELY.
17. CONTRACTOR SHALL ENSURE ALL SUBCONTRACTORS ARE PROVIDED WITH A COMPLETE AND CURRENT SET OF DRAWINGS AND SPECIFICATIONS FOR THIS PROJECT.
18. CONTRACTOR SHALL REMOVE ALL RUBBISH AND DEBRIS FROM THE SITE AT THE END OF EACH DAY.
19. CONTRACTOR SHALL COORDINATE WORK SCHEDULE WITH AMERICAN TOWER CORPORATION (ATC) AND TAKE PRECAUTIONS TO MINIMIZE IMPACT AND DISRUPTION OF OTHER OCCUPANTS OF THE FACILITY.
20. CONTRACTOR SHALL FURNISH T-MOBILE AND AMERICAN TOWER CORPORATION (ATC) WITH A PDF MARKED UP AS-BUILT SET OF DRAWINGS UPON COMPLETION OF WORK.
21. PRIOR TO SUBMISSION OF BID, CONTRACTOR SHALL COORDINATE WITH T-MOBILE REP TO DETERMINE WHAT, IF ANY, ITEMS WILL BE PROVIDED. ALL ITEMS NOT PROVIDED SHALL BE PROVIDED AND INSTALLED BY THE CONTRACTOR. CONTRACTOR WILL INSTALL ALL ITEMS PROVIDED
22. PRIOR TO SUBMISSION OF BID, CONTRACTOR SHALL COORDINATE WITH T-MOBILE REP TO DETERMINE IF ANY PERMITS WILL BE OBTAINED BY CONTRACTOR. ALL REQUIRED PERMITS NOT OBTAINED BY T-MOBILE MUST BE OBTAINED, AND PAID FOR, BY THE CONTRACTOR
23. CONTRACTOR SHALL INSTALL ALL SITE SIGNAGE IN ACCORDANCE WITH T-MOBILE SPECIFICATIONS AND REQUIREMENTS
24. CONTRACTOR SHALL SUBMIT ALL SHOP DRAWINGS TO T-MOBILE FOR REVIEW AND APPROVAL PRIOR TO FABRICATION
25. ALL EQUIPMENT SHALL BE INSTALLED ACCORDING TO MANUFACTURER'S SPECIFICATIONS AND LOCATED ACCORDING TO T-MOBILE SPECIFICATIONS, AND AS SHOWN IN THESE PLANS
26. THE CONTRACTOR SHALL SUPERVISE AND DIRECT THE PROJECT DESCRIBED HEREIN. THE CONTRACTOR SHALL BE SOLELY RESPONSIBLE FOR ALL THE CONSTRUCTION MEANS, METHODS, TECHNIQUES, SEQUENCES AND PROCEDURES AND FOR COORDINATING ALL PORTIONS OF THE WORK UNDER THE CONTRACT.
27. CONTRACTOR SHALL NOTIFY T-MOBILE REP A MINIMUM OF 48 HOURS IN ADVANCE OF POURING CONCRETE OR BACKFILLING ANY UNDERGROUND UTILITIES, FOUNDATIONS OR SEALING ANY WALL, FLOOR OR ROOF PENETRATIONS FOR ENGINEERING REVIEW AND APPROVAL.
28. WHEN THE PROJECT SCOPE REQUIRES THE USE OF THE SAFETY CLIMB, THE GENERAL CONTRACTOR SHALL ENSURE THE SAFETY CLIMB IS FREE OF OBSTRUCTIONS, NOT RUBBING ON OR TRAPPED BY ANY INSTALLED CUSTOMER EQUIPMENT, IS VISUALLY TAUT, MEETS MANUFACTURER INSTALLATION SPECIFICATIONS, AND IS FIRMLY SECURED AT ALL CABLE GUIDE LOCATIONS UPON PROJECT COMPLETION.
29. COMPLETION OF PROJECT SHALL NOT OBSTRUCT, TRAP, LOOSEN, OR OTHERWISE CAUSE FAILURE TO MEET MANUFACTURER INSTALLATION REQUIREMENTS FOR THE SAFETY CLIMB.
30. CONTRACTOR SHALL BE RESPONSIBLE FOR SITE SAFETY INCLUDING COMPLIANCE WITH ALL APPLICABLE OSHA STANDARDS AND RECOMMENDATIONS AND SHALL PROVIDE ALL NECESSARY SAFETY DEVICES INCLUDING PPE AND PPM AND CONSTRUCTION DEVICES SUCH AS WELDING AND FIRE PREVENTION, TEMPORARY SHORING, SCAFFOLDING, TRENCH BOXES/SLOPING, BARRIERS, ETC
31. THE CONTRACTOR SHALL PROTECT AT HIS OWN EXPENSE, ALL EXISTING FACILITIES AND SUCH OF HIS NEW WORK LIABLE TO INJURY DURING THE CONSTRUCTION PERIOD. ANY DAMAGE CAUSED BY NEGLECT ON THE PART OF THIS CONTRACTOR OR HIS REPRESENTATIVES, OR BY THE ELEMENTS DUE TO NEGLECT ON THE PART OF THIS CONTRACTOR OR HIS REPRESENTATIVES, EITHER TO THE EXISTING WORK, OR TO HIS WORK OR THE WORK OF ANY OTHER CONTRACTOR, SHALL BE REPAIRED AT HIS EXPENSE TO THE OWNER'S SATISFACTION
32. ALL WORK SHALL BE INSTALLED IN A FIRST CLASS, NEAT AND WORKMANLIKE MANNER BY MECHANICS SKILLED IN THE TRADE INVOLVED. THE QUALITY OF WORKMANSHIP SHALL BE SUBJECT TO THE APPROVAL OF THE T-MOBILE REP. ANY WORK FOUND BY THE T-MOBILE REP TO BE OF INFERIOR QUALITY AND/OR WORKMANSHIP SHALL BE REPLACED AND/OR REWORKED AT CONTRACTOR EXPENSE UNTIL APPROVAL IS OBTAINED
33. IN ORDER TO ESTABLISH STANDARDS OF QUALITY AND PERFORMANCE, ALL TYPES OF MATERIALS LISTED HEREINAFTER BY MANUFACTURER'S NAMES AND/OR MANUFACTURER'S CATALOG NUMBER SHALL BE PROVIDED BY THESE MANUFACTURERS AS SPECIFIED
34. T-MOBILE FURNISHED EQUIPMENT SHALL BE PICKED-UP AT THE T-MOBILE WAREHOUSE, NO LATER THAN 48HR AFTER BEING NOTIFIED INSURED, STORED, UNCRATE, PROTECTED AND INSTALLED BY THE CONTRACTOR WITH ALL APPURTENANCES REQUIRED TO PLACE THE EQUIPMENT IN OPERATION, READY FOR USE. THE CONTRACTOR SHALL BE RESPONSIBLE FOR THE EQUIPMENT AFTER PICKING IT UP.
35. T-MOBILE OR HIS ARCHITECT/ENGINEER RESERVES THE RIGHT TO REJECT ANY EQUIPMENT OR MATERIALS WHICH, IN HIS OWN OPINION ARE NOT IN COMPLIANCE WITH THE CONTRACT DOCUMENTS, EITHER BEFORE OR AFTER INSTALLATION AND THE EQUIPMENT SHALL BE REPLACED WITH EQUIPMENT CONFORMING TO THE REQUIREMENTS OF THE CONTRACT DOCUMENTS BY THE CONTRACTOR AT NO COST TO T-MOBILE OR THEIR ARCHITECT/ENGINEER

STRUCTURAL STEEL NOTES:

1. STRUCTURAL STEEL SHALL CONFORM TO THE LATEST EDITION OF THE AISC "SPECIFICATION FOR THE DESIGN, FABRICATION AND ERECTION OF STRUCTURAL STEEL FOR BUILDINGS."
2. STRUCTURAL STEEL ROLLED SHAPES, PLATES AND BARS SHALL CONFORM TO THE FOLLOWING ASTM DESIGNATIONS
   - A. ASTM A-572, GRADE 50 - ALL W SHAPES, UNLESS NOTED OR A992 OTHERWISE
   - B. ASTM A-36 - ALL OTHER ROLLED SHAPES, PLATES AND BARS UNLESS NOTED OTHERWISE.
   - C. ASTM A-500, GRADE B - HSS SECTION (SQUARE, RECTANGULAR, AND ROUND)
   - D. ASTM A-325, TYPE SC OR N - ALL BOLTS FOR CONNECTING STRUCTURAL MEMBERS
   - E. ASTM F-1554 07 - ALL ANCHOR BOLTS, UNLESS NOTED OTHERWISE
3. ALL EXPOSED STRUCTURAL STEEL MEMBERS SHALL BE HOT-DIPPED GALVANIZED AFTER FABRICATION PER ASTM A123. EXPOSED STEEL HARDWARE AND ANCHOR BOLTS SHALL BE GALVANIZED PER ASTM A153 OR B695
4. ALL FIELD CUT SURFACES, FIELD DRILLED HOLES AND GROUND SURFACES WHERE EXISTING PAINT OR GALVANIZATION REMOVAL WAS REQUIRED SHALL BE REPAIRED WITH (2) BRUSHED COATS OF ZRC GALVILITE COLD GALVANIZING COMPOUND PER ASTM A780 AND MANUFACTURER'S RECOMMENDATIONS
5. DO NOT DRILL HOLES THROUGH STRUCTURAL STEEL MEMBERS EXCEPT AS SHOWN AND DETAILED ON STRUCTURAL DRAWINGS
6. CONNECTIONS
   - A. ALL WELDING TO BE PERFORMED BY AWS CERTIFIED WELDERS AND CONDUCTED IN ACCORDANCE WITH THE LATEST EDITION OF THE AWS WELDING CODE D1.1.
   - B. ALL WELDS SHALL BE INSPECTED VISUALLY. 25% OF WELDS SHALL BE INSPECTED WITH DYE PENETRANT OR MAGNETIC PARTICLE TO MEET THE ACCEPTANCE CRITERIA OF AWS D1.1. REPAIR ALL WELDS AS NECESSARY.
   - C. INSPECTION SHALL BE PERFORMED BY AN AWS CERTIFIED WELD INSPECTOR
   - D. IT IS THE CONTRACTORS RESPONSIBILITY TO PROVIDE BURNING/WELDING PERMITS AS REQUIRED BY LOCAL GOVERNING AUTHORITY AND IF REQUIRED SHALL HAVE FIRE DEPARTMENT DETAIL FOR ANY WELDING ACTIVITY.
   - E. ALL ELECTRODES TO BE LOW HYDROGEN, MATCHING FILLER METAL, PER AWS D1.1, UNLESS NOTED OTHERWISE.
   - F. MINIMUM WELD SIZE TO BE 0.1875 INCH FILLET WELDS, UNLESS NOTED OTHERWISE.
   - G. PRIOR TO FIELD WELDING GALVANIZING MATERIAL, CONTRACTOR SHALL GRIND OFF GALVANIZING ½" BEYOND ALL FIELD WELD SURFACES. AFTER WELD AND WELD INSPECTION IS COMPLETE, REPAIR ALL GROUND AND WELDED SURFACES WITH ZRC GALVILITE COLD GALVANIZING COMPOUND PER ASTM A780 AND MANUFACTURERS RECOMMENDATIONS.
   - H. THE CONTRACTOR SHALL PROVIDE ADEQUATE SHORING AND/OR BRACING WHERE REQUIRED DURING CONSTRUCTION UNTIL ALL CONNECTIONS ARE COMPLETE.
   - I. ANY FIELD CHANGES OR SUBSTITUTIONS SHALL HAVE PRIOR APPROVAL FROM THE ENGINEER, AND T-MOBILE PROJECT MANAGER IN WRITING

SPECIAL CONSTRUCTION ANTENNA INSTALLATION NOTES:

1. WORK INCLUDED
   - A. ANTENNA AND COAXIAL CABLES ARE FURNISHED BY T-MOBILE UNDER A SEPARATE CONTRACT. THE CONTRACTOR SHALL ASSIST ANTENNA INSTALLATION CONTRACTOR IN TERMS OF COORDINATION AND SITE ACCESS. ERECTION SUBCONTRACTOR SHALL BE RESPONSIBLE FOR THE PROTECTION OF PERSONNEL
   - B. INSTALL ANTENNAS AS INDICATED ON DRAWINGS AND T-MOBILE SPECIFICATIONS
   - C. INSTALL GALVANIZED STEEL ANTENNA MOUNTS AS INDICATED ON DRAWINGS
   - D. INSTALL FURNISHED GALVANIZED STEEL OR ALUMINUM WAVEGUIDE AND PROVIDE PRINTOUT OF THAT TEST.
   - E. CONTRACTOR SHALL PROVIDE FOUR (4) SETS OF SWEEP TESTS USING ANRITZU-PACKARD 87139 RF SCALAR NETWORK ANALYZER. SUBMIT FREQUENCY DOMAIN REFLECTOMETER(FDR) TESTS RESULTS TO THE PROJECT MANAGER. SWEEP TESTS SHALL BE AS PER ATTACHED RFS "MINIMUM FIELD TESTING RECOMMENDED FOR ANTENNA AND HELIAX COAXIAL CABLE SYSTEMS" DATED 10/5/93. TESTING SHALL BE PERFORMED BY AN INDEPENDENT TESTING SERVICE AND BE BOUND AND SUBMITTED WITHIN ONE WEEK OF WORK COMPLETION.
   - F. INSTALL COAXIAL CABLES AND TERMINATING BETWEEN ANTENNAS AND EQUIPMENT PER MANUFACTURER'S RECOMMENDATIONS. WEATHERPROOF ALL CONNECTIONS BETWEEN THE ANTENNA AND EQUIPMENT PER MANUFACTURER'S REQUIREMENTS. TERMINATE ALL COAXIAL CABLE THREE (3) FEET IN EXCESS OF ENTRY PORT LOCATION UNLESS OTHERWISE STATED.
   - G. ANTENNA AND COAXIAL CABLE GROUNDING
2. ALL EXTERIOR #6 GREEN GROUND WIRE "DAISY CHAIN" CONNECTIONS ARE TO BE WEATHER SEALED WITH RFS CONNECTORS/SPLICE WEATHERPROOFING KIT #221213 OR EQUAL.
3. ALL COAXIAL CABLE GROUNDING KITS ARE TO BE INSTALLED ON STRAIGHT RUNS OF COAXIAL CABLE (NOT WITHIN BENDS).

CONCRETE AND REINFORCING STEEL NOTES:

1. DESIGN AND CONSTRUCTION OF ALL CONCRETE ELEMENTS SHALL CONFORM TO THE LATEST EDITIONS OF ALL APPLICABLE CODES INCLUDING: ACI 301 "SPECIFICATIONS FOR STRUCTURAL CONCRETE FOR BUILDINGS", ACI 117 "SPECIFICATIONS FOR TOLERANCES FOR CONCRETE CONSTRUCTION AND MATERIALS", AND ACI 318 "BUILDING CODE REQUIREMENTS FOR REINFORCED CONCRETE."
2. MIX DESIGN SHALL BE APPROVED BY T-MOBILE REP PRIOR TO PLACING CONCRETE.
3. CONCRETE SHALL BE NORMAL WEIGHT, 6 % AIR ENTRAINED (+/- 1.5%) WITH A SLUMP RANGE OF 3-6" AND HAVE A MINIMUM 28-DAY COMPRESSIVE STRENGTH OF 4500 PSI UNLESS OTHERWISE NOTED
4. THE FOLLOWING MATERIALS SHALL BE USED

PORTLAND CEMENT:	ASTM C150, TYPE 2
REINFORCEMENT:	ASTM A185, PLAIN STEEL WELDED WIRE FABRIC
REINFORCEMENT BARS	ASTM A615, GRADE 60, DEFORMED
NORMAL WEIGHT AGGREGATE	ASTM C33
WATER:	ASTM C 94/C 94M
WELDED WIRE FABRIC	ASTM A185
ADMIXTURES:	
-WATER-REDUCING AGENT	ASTM C 494/C 494M, TYPE A
-AIR-ENTERING AGENT	ASTM C 260/C 260M
-SUPERPLASTICIZER	ASTM C494, TYPE F OR TYPE G
-RETARDING	ASTM C 494/C 494M, TYPE B

5. MINIMUM CONCRETE COVER FOR REINFORCING STEEL SHALL BE NO LESS THAN 3".
6. A 3/4" CHAMFER SHALL BE PROVIDED AT ALL EXPOSED EDGES OF CONCRETE IN ACCORDANCE WITH ACI 301 SECTION 4.2.4, UNLESS NOTED OTHERWISE
7. INSTALLATION OF CONCRETE EXPANSION/WEDGE ANCHOR SHALL BE PER MANUFACTURERS WRITTEN RECOMMENDED PROCEDURE. THE ANCHOR BOLT, DOWEL, OR ROD SHALL CONFORM TO MANUFACTURER'S RECOMMENDATION FOR EMBEDMENT DEPTH OR AS SHOWN ON THE DRAWINGS. NO REBAR SHALL BE CUT WITHOUT PRIOR APPROVAL FROM AN ATC ENGINEER WHEN DRILLING HOLES IN CONCRETE.
8. ADMIXTURES SHALL CONFORM TO THE APPROPRIATE ASTM STANDARD AS REFERENCED IN "METHOD 1" OF ACI 301.
9. DO NOT WELD OR TACK WELD REINFORCING STEEL.
10. ALL DOWELS, ANCHOR BOLTS, EMBEDDED STEEL, ELECTRICAL CONDUITS, PIPE SLEEVES, GROUNDS AND ALL OTHER EMBEDDED ITEMS AND FORMED DETAILS SHALL BE IN PLACE BEFORE START OF CONCRETE PLACEMENT.
11. REINFORCEMENT SHALL BE COLD BENT WHENEVER BENDING IS REQUIRED.
12. DO NOT PLACE CONCRETE IN WATER, ICE, OR ON FROZEN GROUND
13. FOR COLD-WEATHER (ACI 306) AND HOT-WEATHER (ACI 301M) CONCRETE PLACEMENT, CONFORM TO APPLICABLE ACI CODES AND RECOMMENDATIONS. IN EITHER CASE, MATERIALS CONTAINING CHLORIDE, CALCIUM, SALTS, ETC. SHALL NOT BE USED. PROTECT FRESH CONCRETE FROM WEATHER FOR 7 DAYS, MINIMUM
14. ALL CONCRETE SHALL HAVE A "SMOOTH FORM FINISH."
15. SPLICING OF REINFORCEMENT IS PERMITTED ONLY AT LOCATIONS SHOWN IN THE CONTRACT DRAWINGS OR AS ACCEPTED BY THE ENGINEER. UNLESS OTHERWISE SHOWN OR NOTED REINFORCING STEEL SHALL BE SPLICED TO DEVELOP ITS FULL TENSILE CAPACITY (CLASS A) IN ACCORDANCE WITH ACI 318
16. DETAILING OF REINFORCING STEEL SHALL CONFORM TO "ACI MANUAL OF STANDARD PRACTICE FOR DETAILING REINFORCED CONCRETE STRUCTURES" (ACI 315)
17. ALL SLAB CONSTRUCTION SHALL BE CAST MONOLITHICALLY WITHOUT HORIZONTAL CONSTRUCTION JOINTS, UNLESS SHOWN IN THE CONTRACT DRAWINGS
18. LOCATION OF ALL CONSTRUCTION JOINTS ARE SUBJECT TO THE REQUIREMENTS OF THE CONTRACT DOCUMENTS, CONFORMANCE WITH ACI 318, AND ACCEPTANCE OF THE ENGINEER. DRAWINGS SHOWING LOCATION OF DETAILS OF THE PROPOSED CONSTRUCTION JOINTS SHALL BE SUBMITTED WITH REINFORCING STEEL PLACEMENT DRAWINGS
19. SPLICES OF WWF, AT ALL SPLICED EDGES, SHALL BE SUCH THAT THE OVERLAP MEASURED BETWEEN OUTERMOST CROSS WIRES OF EACH FABRIC SHEET IS NOT LESS THAN THE SPACING OF THE CROSS WIRE PLUS 2 INCHES, NOR LESS THAN 6".
20. BAR SUPPORTS SHALL BE ALL-GALVANIZED METAL WITH PLASTIC TIPS.
21. ALL REINFORCEMENT SHALL BE SECURELY TIED IN PLACE TO PREVENT DISPLACEMENT BY CONSTRUCTION TRAFFIC OR CONCRETE. TIE WIRE SHALL BE OF SUFFICIENT STRENGTH FOR INTENDED PURPOSE, BUT NOT LESS THAN NO. 18 GAUGE.
22. SLAB ON GROUND: COMPACT STRUCTURAL FILL TO 95% DENSITY AND THEN PLACE 6" GRAVEL BENEATH SLAB

ELECTRICAL NOTES:

1. ELECTRICAL WORK SHALL BE PERFORMED BY ELECTRICAL CONTRACTOR. ELECTRICAL CONTRACTOR SHALL ENSURE THAT ALL WORK COMPLIES WITH ALL APPLICABLE LOCAL AND STATE CODES AND NATIONAL ELECTRICAL CODE.
2. ALL SUGGESTED ELECTRICAL ELEMENTS (SUCH AS BREAKER SIZES, WIRE SIZES, CONDUITS SIZES) ARE FOR ZONING PURPOSES ONLY. IT IS THE RESPONSIBILITY TO OF THE ELECTRICAL CONTRACTOR TO CONFIRM COMPLIANCE WITH LOCAL ELECTRICAL CODES AND PASS ALL APPLICABLE AND NECESSARY INSPECTIONS. IN SOME EVENTS, IT MAY BE NECESSARY TO PERFORM AN ELECTRICAL LOAD STUDY TO VERIFY THE CAPACITY OF THE EXISTING SERVICE. THIS IS NOT THE RESPONSIBILITY OF ATC. IT IS THE RESPONSIBILITY OF THE ELECTRICAL CONTRACTOR.
3. CONTRACTOR SHALL FIELD LOCATE ALL BELOW GRADE GROUNDING CABLES AND UTILITY LINES PRIOR TO CONSTRUCTION. CONTRACTOR IS RESPONSIBLE FOR RELOCATION OF ALL UTILITIES AND GROUNDING LINES THAT MAY BECOME DISTURBED OR CONFLICTING IN THE COURSE OF CONSTRUCTION.

ALL DISCREPANCIES FROM WHAT IS SHOWN ON THESE CONSTRUCTION DRAWINGS SHALL BE COMMUNICATED TO ATC ENGINEERING IMMEDIATELY FOR CORRECTION OR RE-DESIGN. FAILURE TO COMMUNICATE DIRECTLY WITH ATC ENGINEERING OR ANY CHANGES FROM THE DESIGN CONDUCTED WITHOUT PRIOR APPROVAL FROM ATC ENGINEERING SHALL BE THE SOLE RESPONSIBILITY OF THE GENERAL CONTRACTOR.

AMERICAN TOWER®

TOWER ENGINEERING PROFESSIONALS
326 TRYON ROAD
RALEIGH, NC 27603-3530
OFFICE: (919) 661-6351
www.tepgroup.net

REV.	DESCRIPTION	BY	DATE
A	PRELIMINARY	KKP	10/26/23
0	100% CONSTRUCTION	RMJ	11/29/23

ATC SITE NUMBER:
89390

ATC SITE NAME:
WALKER RIDGE

T-MOBILE SITE NAME:
ATC: WALKER RIDGE

SITE ADDRESS:
1135 WATERTROUGH ROAD
CLEARLAKE OAKS, CA 95423-8575

SEAL:

REGISTERED PROFESSIONAL ENGINEER
ANDREW T. HALDANE
77502
EXP 06-30-25
CIVIL
STATE OF CALIFORNIA

11/29/23

T-Mobile

DATE DRAWN:	11/29/23
ATC JOB NO:	14250960
CUSTOMER NAME:	ATC: WALKER RIDGE
CUSTOMER ID:	BA90390A

GENERAL NOTES

SHEET NUMBER:	REVISION:
G-002	0

NOTES

1. BOUNDARY LINES OBTAINED FROM LAKE COUNTY ONLINE GIS.
2. ZONING INFORMATION OBTAINED FROM LAKE COUNTY.
3. THE TOWER IS LOCATED IN ZONE "D," AREAS UNDETERMINED ACCORDING TO FEMA COMMUNITY PANEL #06033C0600D, DATED SEPTEMBER 30, 2005.

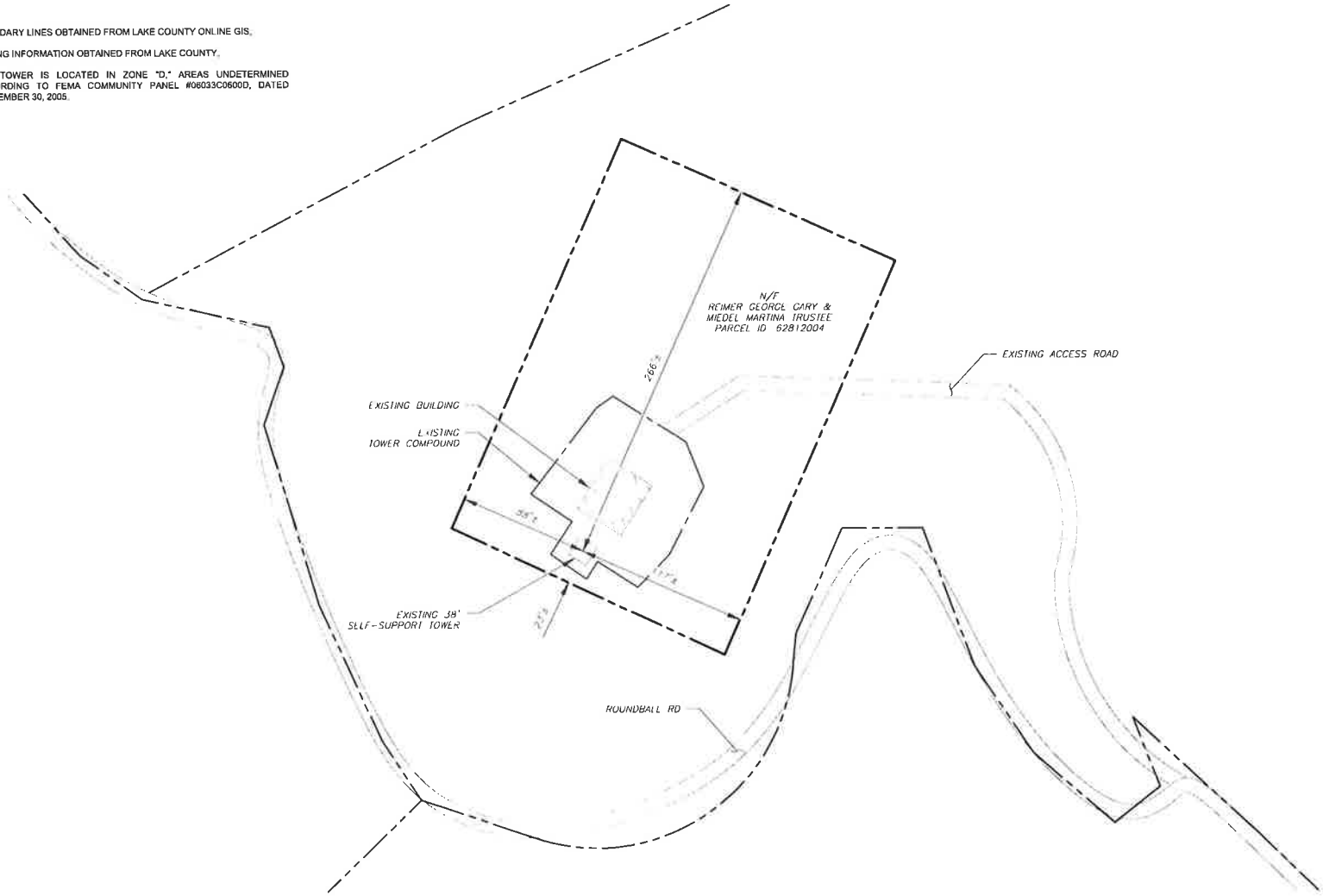

1 OVERALL SITE PLAN
SCALE 1" = 70'

0 70' 140'

SCALE: 1"=70' (11X17)
1"=35' (22X34)

N

LEGEND

- EXISTING PROPERTY LINE
- EXISTING ADJACENT PROPERTY LINE
- EXISTING LEASE AREA

AMERICAN TOWER®

TOWER ENGINEERING PROFESSIONALS
326 TRYON ROAD
RALEIGH, NC 27603-3530
OFFICE: (919) 661-6351
www.tepgroup.net

REV.	DESCRIPTION	BY	DATE
A	PRELIMINARY	KKP	10/26/23
0	100% CONSTRUCTION	RMJ	11/29/23
1	100% CONSTRUCTION	SSP	12/29/23

ATC SITE NUMBER:
89390

ATC SITE NAME:
WALKER RIDGE

T-MOBILE SITE NAME:
ATC: WALKER RIDGE

SITE ADDRESS:
1135 WATERTROUGH ROAD
CLEARLAKE OAKS, CA 95423-8575

SEAL:

REGISTERED PROFESSIONAL ENGINEER
ANDREW T. HALDANE
77502
EXP 06-30-25
CIVIL
STATE OF CALIFORNIA

12/29/23

T-Mobile

DATE DRAWN:	12/29/23
ATC JOB NO:	14250980
CUSTOMER NAME:	ATC: WALKER RIDGE
CUSTOMER ID:	BA90390A

OVERALL SITE PLAN

SHEET NUMBER: C-001

REVISION: 1

SITE PLAN NOTES:

1. THIS SITE PLAN REPRESENTS THE BEST PRESENT KNOWLEDGE AVAILABLE TO THE ENGINEER AT THE TIME OF THIS DESIGN. THE CONTRACTOR SHALL VISIT THE SITE PRIOR TO CONSTRUCTION AND VERIFY ALL EXISTING CONDITIONS RELATED TO THE SCOPE OF WORK FOR THIS PROJECT.
2. ICE BRIDGE, CABLE LADDER, COAX PORT, AND COAX CABLE ARE SHOWN FOR REFERENCE ONLY. CONTRACTOR SHALL CONFIRM THE EXACT LOCATION OF ALL PROPOSED AND EXISTING EQUIPMENT AND STRUCTURES DEPICTED ON THIS PLAN, BEFORE UTILIZING EXISTING CABLE SUPPORTS, COAX PORTS, INSTALLING NEW PORTS OR ANY OTHER EQUIPMENT, CONTRACTOR SHALL VERIFY ALL ASPECTS OF THE COMPONENTS MEET THE ATC SPECIFICATIONS.
3. IT IS THE RESPONSIBILITY OF THE CONTRACTOR TO COORDINATE WITH THE T-MOBILE REPRESENTATIVE AND LOCAL UTILITY COMPANY FOR THE INSTALLATION OF CONDUITS, CONDUCTORS, BREAKERS, DISCONNECTS, OR ANY OTHER EQUIPMENT REQUIRED FOR ELECTRICAL SERVICE. ALL ELECTRICAL WORK SHALL BE PERFORMED IN ACCORDANCE WITH LATEST EDITION OF THE STATE AND NATIONAL CODES, ORDINANCES AND REGULATIONS APPLICABLE TO THIS PROJECT.

LEGEND

⊗	GROUNDING TEST WELL
ATS	AUTOMATIC TRANSFER SWITCH
B	BOLLARD
CSC	CELL SITE CABINET
D	DISCONNECT
E	ELECTRICAL
F	FIBER
GEN	GENERATOR
G	GENERATOR RECEPTACLE
HH, V	HAND HOLE, VAULT
IB	ICE BRIDGE
K	KENTROX BOX
LC	LIGHTING CONTROL
M	METER
PB	PULL BOX
PP	POWER POLE
T	TELCO
TRN	TRANSFORMER
	CHAINLINK FENCE

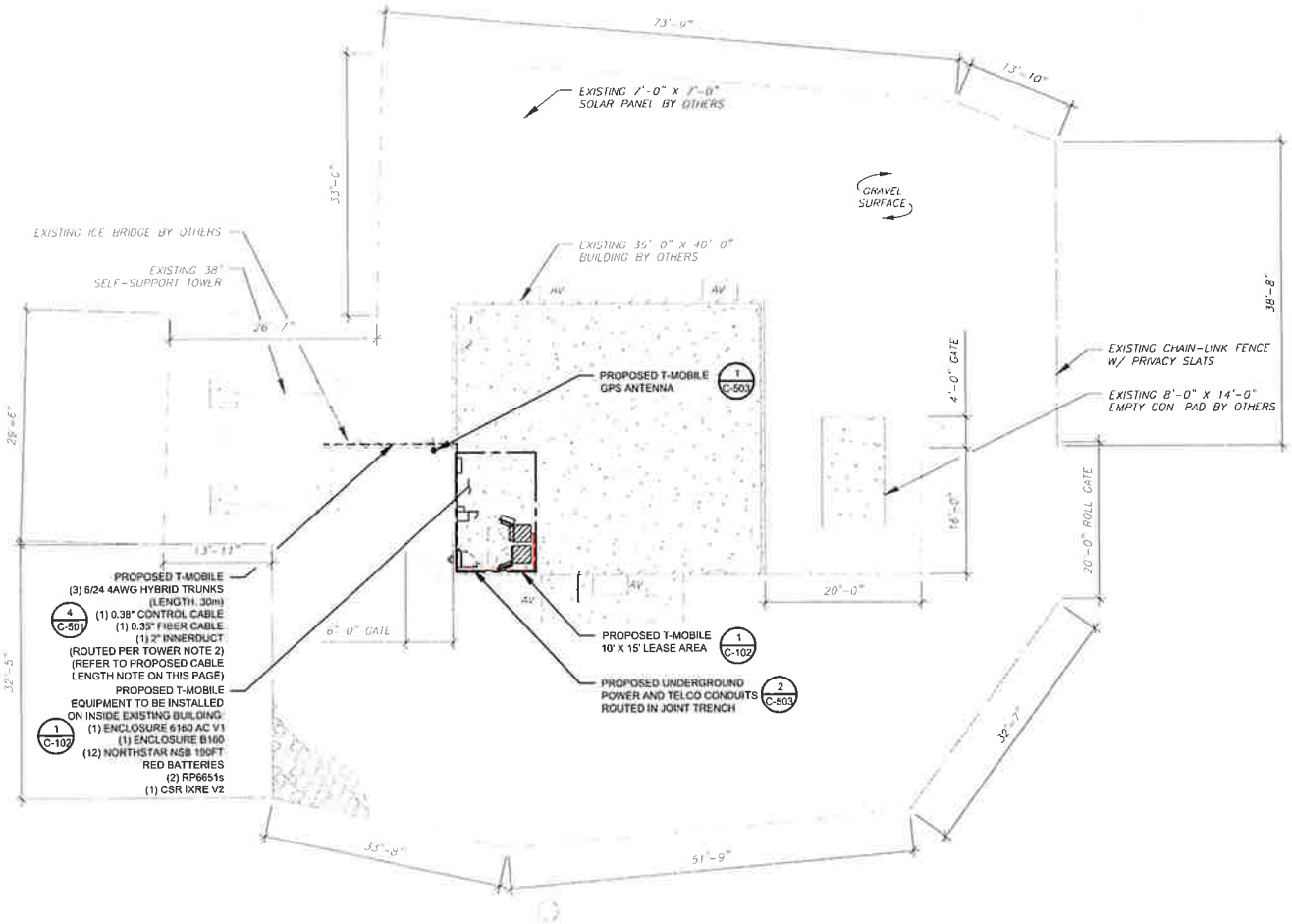

1 DETAILED SITE PLAN

SCALE 1" = 15'

0 15' 30'

SCALE 1"=15' (11X17)
1"=7.5' (22X34)

PROPOSED CABLE NOTES:

1. ESTIMATED LENGTH OF PROPOSED CABLE IS 30m. ESTIMATED LENGTH OF CABLE WAS PROVIDED BY CUSTOMER OR CALCULATED BY ADDING THE RAD CENTER AND THE DISTANCE FROM THE SHELTER ENTRY PLATE TO THE TOWER (ALONG THE ICE BRIDGE) AND A SAFETY FACTOR MEASUREMENT OF 15% (OF THE TWO PREVIOUS VALUES), CDS DEFER TO GREATEST CABLE LENGTH.
2. ROUTE PROPOSED CABLES ALONG SAME PATH AS EXISTING CABLES AND IN ACCORDANCE WITH STRUCTURAL ANALYSIS. WHERE POSSIBLE UTILIZE EXISTING CABLE SUPPORT STRUCTURES AS PROVIDED FOR CARRIER TO ADEQUATELY SECURE CABLES, USING EITHER APPROPRIATELY SIZED STAINLESS STEEL SNAP-INS OR MOUNTING HARDWARE AND BRACKETS AS SPECIFIED BY CABLE MANUFACTURER. OTHERWISE, ATTACH CABLES TO HORIZONTAL OR DIAGONAL TOWER MEMBERS USING PROPOSED STAINLESS STEEL ADAPTERS (DO NOT ATTACH TO TOWER LEG).

AMERICAN TOWER®

TOWER ENGINEERING PROFESSIONALS
326 TRYON ROAD
RALEIGH, NC 27603-3530
OFFICE: (919) 661-6351
www.tepgroup.net

REV.	DESCRIPTION	BY	DATE
A	PRELIMINARY	KKP	10/26/23
0	100% CONSTRUCTION	RMJ	11/29/23
1	100% CONSTRUCTION	SSP	12/29/23

ATC SITE NUMBER:
89390

ATC SITE NAME
WALKER RIDGE

T-MOBILE SITE NAME:
ATC: WALKER RIDGE

SITE ADDRESS:
1135 WATERTROUGH ROAD
CLEARLAKE OAKS, CA 95423-8575

SEAL:

REGISTERED PROFESSIONAL ENGINEER
ANDREW T. HALDANE
77502
EXP 06-30-25
CIVIL
STATE OF CALIFORNIA

12/29/23

T-Mobile

DATE DRAWN:	12/29/23
ATC JOB NO:	14250980
CUSTOMER NAME:	ATC: WALKER RIDGE
CUSTOMER ID:	BA90390A

DETAILED SITE PLAN

SHEET NUMBER	REVISION
C-101	1

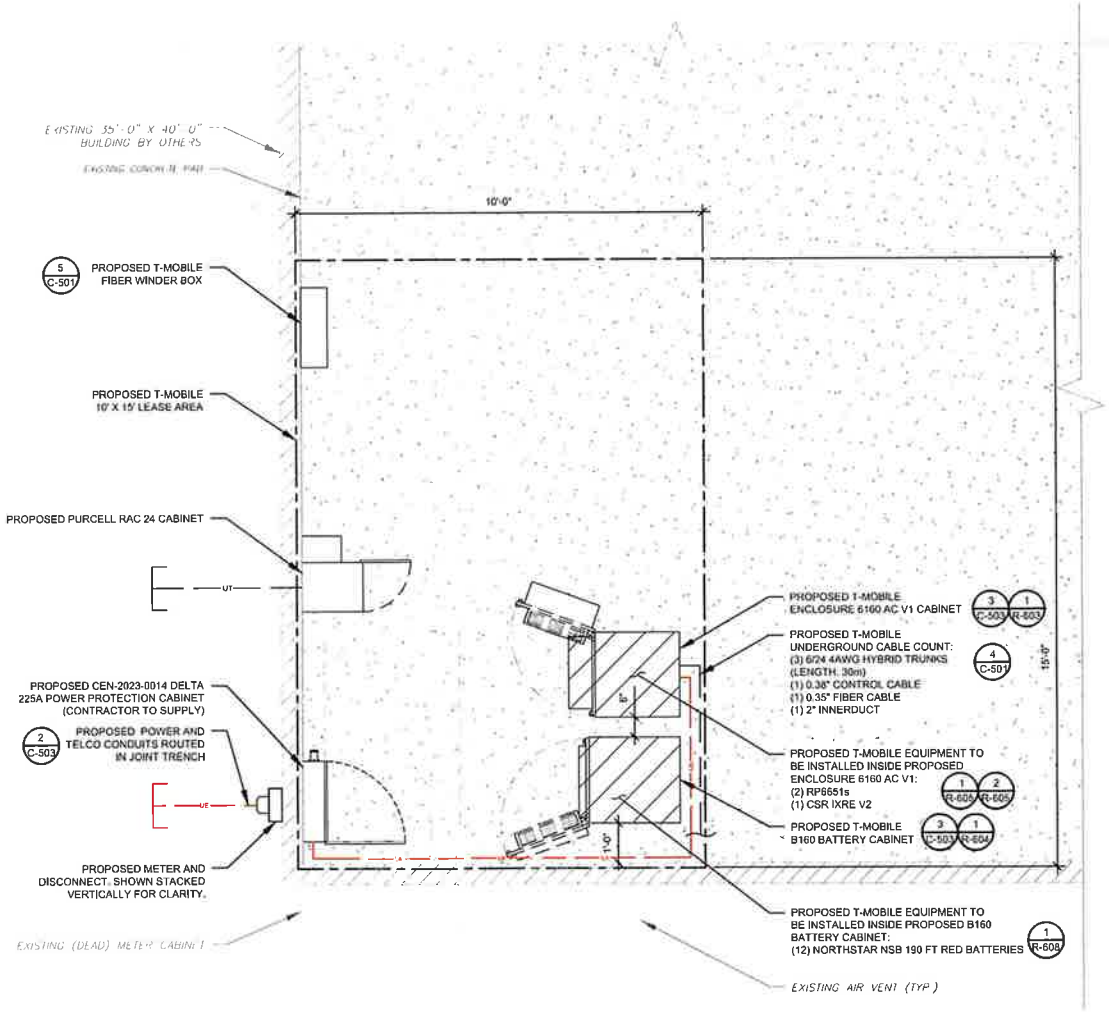

1 PROPOSED GROUND EQUIPMENT LAYOUT

SCALE: 1" = 3'

0 3' 6'

SCALE 1"=3' (11X17)
1"=1.5' (22X34)

AMERICAN TOWER®

TOWER ENGINEERING PROFESSIONALS
326 TRYON ROAD
RALEIGH, NC 27603-3530
OFFICE: (919) 661-6351
www.tepgroup.net

REV.	DESCRIPTION	BY	DATE
A	PRELIMINARY	KKP	10/26/23
0	100% CONSTRUCTION	RMJ	11/29/23

ATC SITE NUMBER:
89390

ATC SITE NAME:
WALKER RIDGE

T-MOBILE SITE NAME:
ATC: WALKER RIDGE

SITE ADDRESS:
1135 WATERTROUGH ROAD
CLEARLAKE OAKS, CA 95423-8575

SEAL:

REGISTERED PROFESSIONAL ENGINEER
ANDREW T. HALDANE
77502
EXP. 06-30-25
CIVIL
STATE OF CALIFORNIA

11/29/23

T-Mobile

DATE DRAWN:	11/29/23
ATC JOB NO:	14250980
CUSTOMER NAME:	ATC: WALKER RIDGE
CUSTOMER ID:	BA90390A

DETAILED EQUIPMENT PLAN

SHEET NUMBER: C-102

REVISION: 0

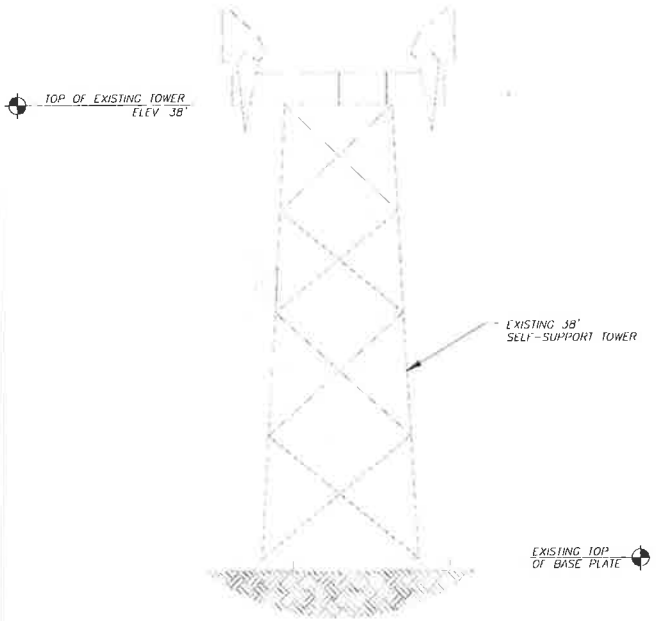

1 EXISTING TOWER ELEVATION
SCALE N.T.S.

ATC HAS NOT ANALYZED THE PROPOSED ANTENNA MOUNT(S) TO DETERMINE ADEQUATE STRUCTURAL CAPACITY FOR PROPOSED CARRIER LOADING.

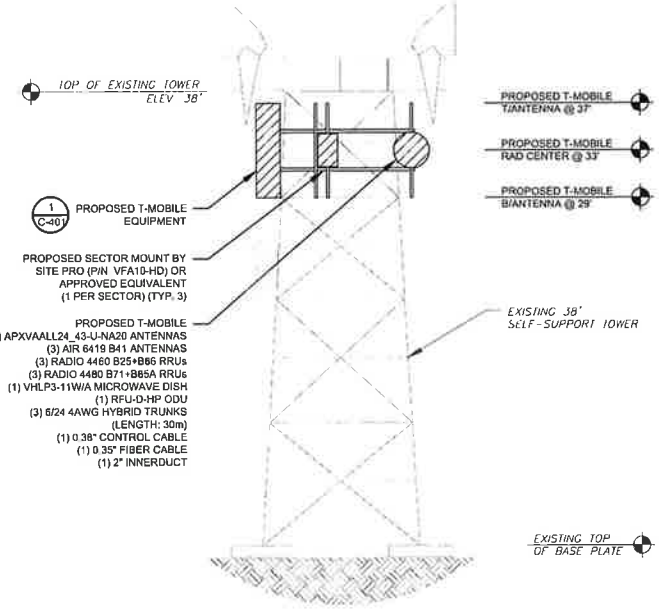

2 PROPOSED TOWER ELEVATION
SCALE N.T.S.

TOWER NOTES:

1. IT IS THE CONTRACTOR'S RESPONSIBILITY TO CONFIRM WITH THE PROJECT MANAGER THAT THEY HAVE THE MOST RECENT VERSION OF THE STRUCTURAL ANALYSIS BEFORE COMMENCING WORK. EXISTING AND PROPOSED TOWER APPURTENANCES, MOUNTS, AND ANTENNAS ARE SHOWN BASED ON THE STRUCTURAL ANALYSIS.
2. WHERE APPLICABLE, ALL NEW ANTENNAS, EQUIPMENT, MOUNTS, CABLING, ETC. SHALL BE PAINTED/SOCKED TO MATCH EXISTING EQUIPMENT IN ACCORDANCE WITH FAA, JURISDICTION, AND/OR OTHER LOCAL REQUIREMENTS.
3. ROUTE PROPOSED CABLES ALONG SAME PATH AS EXISTING CABLES AND IN ACCORDANCE WITH STRUCTURAL ANALYSIS. WHERE POSSIBLE UTILIZE EXISTING CABLE SUPPORT STRUCTURES AS PROVIDED FOR CARRIER TO ADEQUATELY SECURE CABLES, USING EITHER APPROPRIATELY SIZED STAINLESS STEEL SNAP-INS OR MOUNTING HARDWARE AND BRACKETS AS SPECIFIED BY CABLE MANUFACTURER. OTHERWISE, ATTACH CABLES TO HORIZONTAL OR DIAGONAL TOWER MEMBERS USING PROPOSED STAINLESS STEEL ADAPTERS (DO NOT ATTACH TO TOWER LEG).
4. TOWER ELEVATIONS ARE MEASURED FROM TOP OF BASE PLATE TO MATCH STRUCTURAL ANALYSIS. ELEVATIONS DO NOT REFLECT TRUE ABOVE GROUND LEVEL (A.G.L.).
5. TOWER ELEVATION DEPICTION MAY NOT REFLECT ALL EQUIPMENT INCLUDED IN STRUCTURAL ANALYSIS. REFER TO STRUCTURAL ANALYSIS FOR FULL TOWER LOADING.

AMERICAN TOWER®

TOWER ENGINEERING PROFESSIONALS
326 TRYON ROAD
RALEIGH, NC 27603-3530
OFFICE: (919) 661-6351
www.tepgroup.net

REV.	DESCRIPTION	BY	DATE
A	PRELIMINARY	KKP	10/26/23
B	100% CONSTRUCTION	RMJ	11/29/23
1	100% CONSTRUCTION	SSP	12/29/23

ATC SITE NUMBER:
89390

ATC SITE NAME:
WALKER RIDGE

T-MOBILE SITE NAME:
ATC: WALKER RIDGE

SITE ADDRESS:
1135 WATERTROUGH ROAD
CLEARLAKE OAKS, CA 95423-8575

SEAL:

REGISTERED PROFESSIONAL ENGINEER
ANDREW T. HALDANE
77502
EXP 06-30-25
CIVIL
STATE OF CALIFORNIA

12/29/23

T-Mobile

DATE DRAWN:	12/29/23
ATC JOB NO.	14250980
CUSTOMER NAME:	ATC: WALKER RIDGE
CUSTOMER ID:	BA90390A

TOWER ELEVATION

SHEET NUMBER:	REVISION
C-201	1

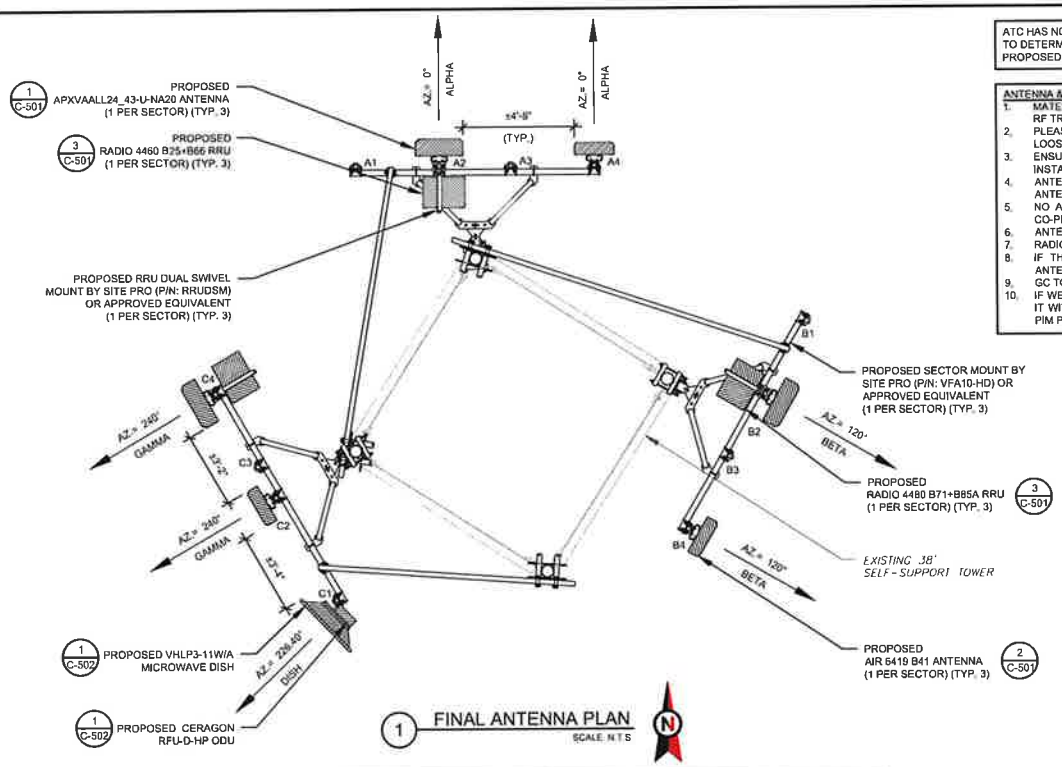

1 FINAL ANTENNA PLAN
SCALE: N.T.S

ATC HAS NOT ANALYZED THE PROPOSED ANTENNA MOUNT(S) TO DETERMINE ADEQUATE STRUCTURAL CAPACITY FOR PROPOSED CARRIER LOADING.

ANTENNA & RRU INSTALLATION NOTES:

1. MATERIALS IN FRONT AND SIDE OF ANTENNAS MUST BE RF TRANSPARENT TO MINIMIZE PIM ISSUES.
2. PLEASE MAKE SURE NO RUST ON COMPONENTS AND NO LOOSE CONNECTIONS.
3. ENSURE THERE ARE NO PIM ISSUES DURING INSTALLATION.
4. ANTENNAS CAN'T SHOOT INTO METAL, OTHER OPERATOR ANTENNAS, ANYTHING THAT CAN CAUSE PIM, ETC.
5. NO ANTENNA SHADOWING. ALL ANTENNAS ARE TO BE CO-PLANAR.
6. ANTENNAS CANNOT TOUCH THE FRP SCREEN.
7. RADIOS CANNOT TOUCH ANTENNAS.
8. IF THERE IS A PARAPET WALL, THE BOTTOM OF ALL ANTENNAS MUST BE ABOVE THE HIGHEST POINT.
9. GC TO INSTALL CONCEALFAB PIM SHIELD KIT.
10. IF WE ARE SHOOTING INTO ANY METAL EITHER REPLACE IT WITH FRP IF NOT POSSIBLE COVER THE METAL WITH PIM PAINTS OR PIM TAPE.

FINAL ANTENNA SCHEDULE

LOCATION			ANTENNA SUMMARY					NON ANTENNA SUMMARY	
SECTOR	RAD	AZ	POS	ANTENNA	BAND	MECH/ ELEC D-TILT	STATUS	ADDITIONAL TOWER MOUNTED EQUIPMENT	STATUS
ALPHA	33'	0°	A1	-	-	-	-	-	-
			A2	APXVAALL24_43-U-NA20	L700/N600/L2100/ L1900/N1900	0°/-	ADD	(1) RADIO 4480 B71+B85A (1) RADIO 4460 B25+B66	ADD ADD
			A3	-	-	-	-	-	-
			A4	AIR 6419 B41	N2500	0°/-	ADD	-	-
BETA	33'	120°	B1	-	-	-	-	-	-
			B2	APXVAALL24_43-U-NA20	L700/N600/L2100/ L1900/N1900	0°/-	ADD	(1) RADIO 4480 B71+B85A (1) RADIO 4460 B25+B66	ADD ADD
			B3	-	-	-	-	-	-
			B4	AIR 6419 B41	N2500	0°/-	ADD	-	-
DISH	33'	226.40°	C1	VHLP3-11W/A	-	-	ADD	(1) CERAGON RFU-D-HP	ADD
GAMMA		240°	C2	AIR 6419 B41	N2500	0°/-	ADD	-	-
			C3	-	-	-	-	-	-
			C4	APXVAALL24_43-U-NA20	L700/N600/L2100/ L1900/N1900	0°/-	ADD	(1) RADIO 4480 B71+B85A (1) RADIO 4460 B25+B66	ADD ADD

1. BASED ON APPROVED ATC APPLICATION 14250980. CONFIRM WITH T-MOBILE REP FOR APPLICABLE UPDATES/REVISIONS AND MOST RECENT RFDS FOR NSN CONFIGURATION (CONFIG). GC TO CAP ALL UNUSED PORTS.
2. CONFIRM SPACING OF PROPOSED EQUIPMENT DOES NOT CAUSE TOWER CONFLICTS NOR IMPEDE TOWER CLIMBING PEGS.

2 ANTENNA SCHEDULE

CABLE LENGTHS FOR JUMPERS
FIBER DISTRIBUTION/OVP TO RRU: 15'
RRU TO COMBINER: 10'
COMBINER TO ANTENNA: 10'

PROPOSED FIBER DISTRIBUTION/OVP BOX		PROPOSED CABLING SUMMARY		
MODEL NUMBER	STATUS	CONTROL	HYBRID/FIBER	STATUS
-	-	-	(3) 6/24 4AWG 30m	ADD
-		(1) 0.38"	(1) 0.35"	ADD
-		(1) 2" INNERDUCT	-	ADD

AMERICAN TOWER®

TOWER ENGINEERING PROFESSIONALS
326 TRYON ROAD
RALEIGH, NC 27603-3530
OFFICE: (919) 661-6351
www.tepgroup.net

REV.	DESCRIPTION	BY	DATE
A	PRELIMINARY	KKP	10/26/23
0	100% CONSTRUCTION	RMJ	11/29/23
1	100% CONSTRUCTION	SSP	12/29/23

ATC SITE NUMBER:
89390

ATC SITE NAME:
WALKER RIDGE

T-MOBILE SITE NAME:
ATC: WALKER RIDGE

SITE ADDRESS:
1135 WATERTROUGH ROAD
CLEARLAKE OAKS, CA 95423-8575

SEAL:

REGISTERED PROFESSIONAL ENGINEER
ANDREW T. HALDANE
77502
EXP. 06-30-25
CIVIL
STATE OF CALIFORNIA

12/29/23

T-Mobile

DATE DRAWN	12/29/23
ATC JOB NO.	14250980
CUSTOMER NAME	ATC: WALKER RIDGE
CUSTOMER ID	BA90390A

ANTENNA INFORMATION & SCHEDULE

SHEET NUMBER: C-401

REVISION: 1

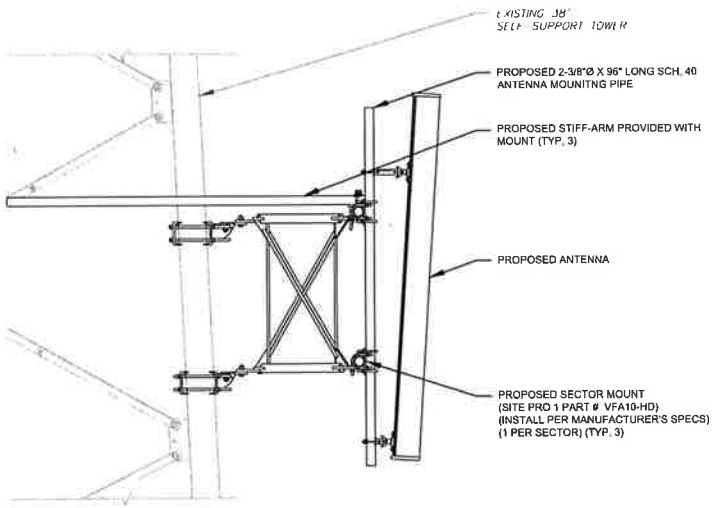

1 PROPOSED ANTENNA MOUNTING DETAIL (ELEVATION)
SCALE: NOT TO SCALE

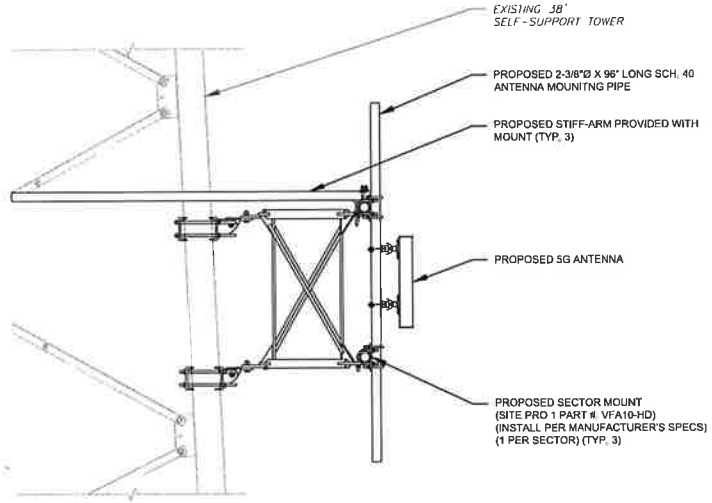

2 PROPOSED 5G ANTENNA MOUNTING DETAIL (ELEVATION)
SCALE: N.T.S

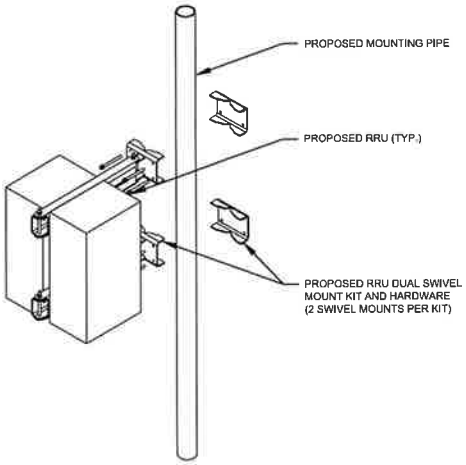

3 PROPOSED RRU MOUNTING DETAIL
SCALE N T S

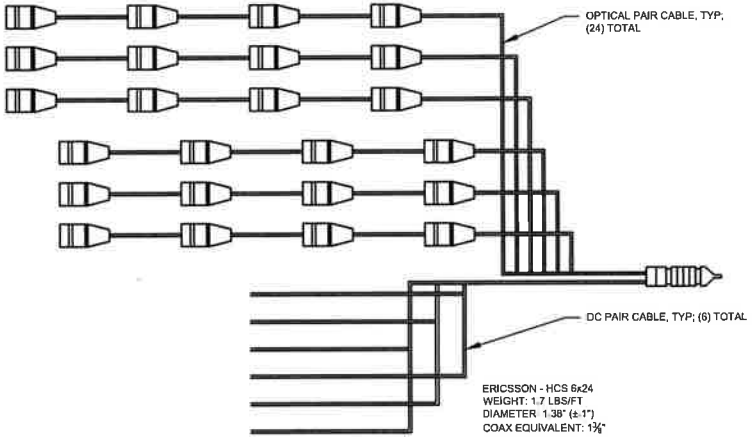

4 PROPOSED HCS DETAIL
SCALE N T S

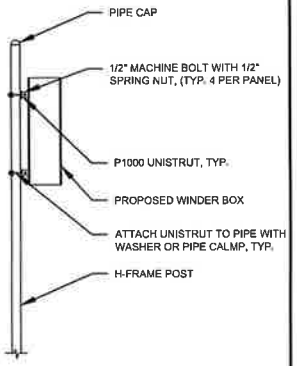

5 PROPOSED WINDER BOX DETAIL
SCALE N.T.S

AMERICAN TOWER®

TOWER ENGINEERING PROFESSIONALS
326 TRYON ROAD
RALEIGH, NC 27603-3530
OFFICE: (919) 661-6351
www.tepgroup.net

REV.	DESCRIPTION	BY	DATE
A	PRELIMINARY	KKP	10/26/23
0	100% CONSTRUCTION	RMJ	11/29/23
1	100% CONSTRUCTION	SSP	12/29/23

ATC SITE NUMBER:
89390

ATC SITE NAME:
WALKER RIDGE

T-MOBILE SITE NAME
ATC: WALKER RIDGE

SITE ADDRESS:
1135 WATERTROUGH ROAD
CLEARLAKE OAKS, CA 95423-8575

SEAL:

12/29/23

T-Mobile

DATE DRAWN	12/29/23
ATC JOB NO.	14250980
CUSTOMER NAME	ATC: WALKER RIDGE
CUSTOMER ID	BA90390A

CONSTRUCTION DETAILS

SHEET NUMBER	REVISION
C-501	1

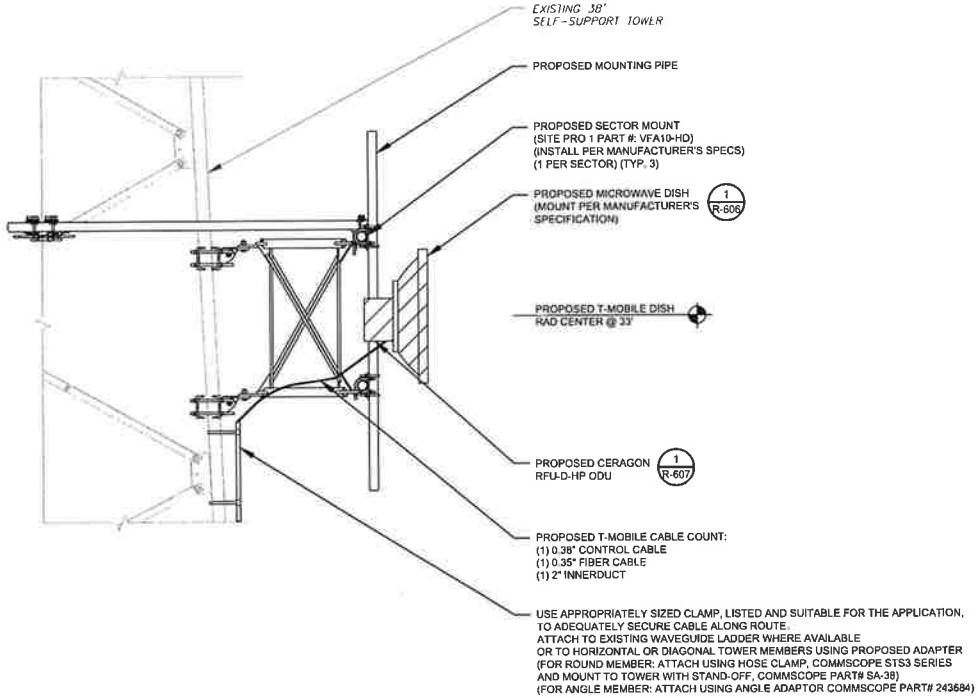

1 PROPOSED MICROWAVE MOUNTING DETAIL (ELEVATION)

SCALE: N.T.S

AMERICAN TOWER®

TOWER ENGINEERING PROFESSIONALS
326 TRYON ROAD
RALEIGH, NC 27603-3530
OFFICE: (919) 661-6351
www.tepgroup.net

REV.	DESCRIPTION	BY	DATE
A	PRELIMINARY	KKP	10/26/23
0	100% CONSTRUCTION	RMJ	11/29/23
1	100% CONSTRUCTION	SSP	12/29/23

ATC SITE NUMBER:
89390

ATC SITE NAME:
WALKER RIDGE

T-MOBILE SITE NAME:
ATC: WALKER RIDGE

SITE ADDRESS
1135 WATERTROUGH ROAD
CLEARLAKE OAKS, CA 95423-8575

SEAL:

REGISTERED PROFESSIONAL ENGINEER
ANDREW T. MALDANE
77502
EXP. 06-30-25
CIVIL
STATE OF CALIFORNIA
12/29/2023

12/29/23

T-Mobile

DATE DRAWN	12/29/23
ATC JOB NO.	14250980
CUSTOMER NAME:	ATC: WALKER RIDGE
CUSTOMER ID:	BA90390A

CONSTRUCTION DETAILS

SHEET NUMBER	REVISION
C-502	1

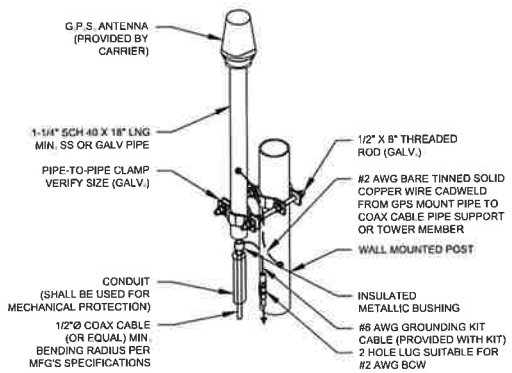

NOTES:
1. GPS SHALL BE PLACED WITH CLEAR SIGHT LINE TO THE SOUTHERN SKY.
2. CONTRACTOR TO SUPPLY COAX FOR GPS UNIT.

1 GPS ANTENNA ATTACHMENT DETAIL

SCALE: N.T.S

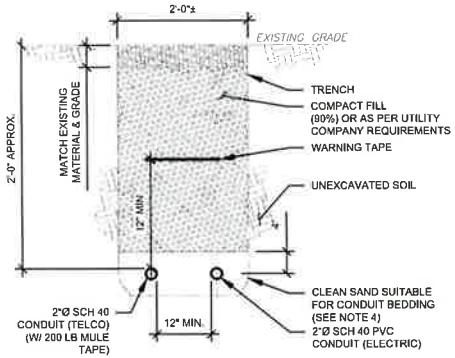

TRENCH NOTES:

1. IF FREE OF ORGANIC OR OTHER DELETERIOUS MATERIAL, EXCAVATED MATERIAL MAY BE USED FOR BACKFILL.
2. IF NOT, PROVIDE CLEAN, COMPACTIBLE MATERIAL. COMPACT IN 8" LIFTS. REMOVE ANY LARGE ROCKS PRIOR TO BACKFILLING. CONTRACTOR TO VERIFY LOCATION OF EXISTING U/G UTILITIES PRIOR TO DIGGING.
3. IF CURRENT AS-BUILT DRAWINGS ARE NOT AVAILABLE CONTRACTOR SHALL HAND DIG U/G TRENCHING.
4. CONCRETE ENCASE CONDUIT WHEN TRENCHING UNDER SITE ACCESS ROAD.

2 TELCO AND POWER CONDUIT JOINT TRENCH

SCALE: N.T.S

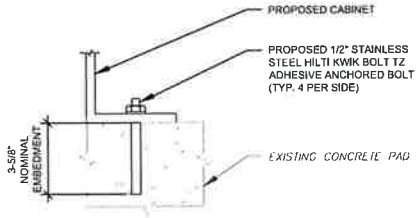

NOTE:

INSTALL HILTI KWIK BOLT ANCHORS STRICTLY PER INSTALLATION INSTRUCTIONS INCLUDED WITH PRODUCT OR FOUND ONLINE AT WWW.US.HILTI.COM. PROPER INSTALLATION IS CRITICAL FOR FULL PERFORMANCE.

3 PROPOSED CABINET ATTACHMENT DETAIL

SCALE: N.T.S

AMERICAN TOWER®

TOWER ENGINEERING PROFESSIONALS
326 TRYON ROAD
RALEIGH, NC 27603-3530
OFFICE: (919) 661-6351
www.tepgroup.net

REV.	DESCRIPTION	BY	DATE
A	PRELIMINARY	KKP	10/26/23
0	100% CONSTRUCTION	RMJ	11/29/23

ATC SITE NUMBER:
89390

ATC SITE NAME:
WALKER RIDGE

T-MOBILE SITE NAME
ATC: WALKER RIDGE

SITE ADDRESS:
1135 WATERTROUGH ROAD
CLEARLAKE OAKS, CA 95423-8575

SEAL

11/29/23

T-Mobile

DATE DRAWN:	11/29/23
ATC JOB NO.	14250980
CUSTOMER NAME:	ATC: WALKER RIDGE
CUSTOMER ID.	BA90390A

CONSTRUCTION DETAILS

SHEET NUMBER: C-503

REVISION 0

GROUNDING NOTES:

1. ALL EQUIPMENT ENCLOSURES, DEVICES AND CONDUITS SHALL BE GROUNDED TO CONFORM WITH THE LATEST REQUIREMENTS OF THE NEC BY THE INSTALLATION OF A SEPARATE, GREEN, INSULATED GROUND CONDUCTOR FOR ALL FEEDER AND BRANCH CIRCUITS. GROUND CONDUCTORS SHALL BE OF THE SIZE INDICATED ON THE DRAWINGS. GROUND CONDUCTORS SHALL BE CONTINUOUS IN LENGTH AND SHALL BE BONDED TO EACH ENCLOSURE THEY PASS THROUGH. CONDUIT SHALL NOT BE USED AS A GROUNDING CONDUCTOR.

2. GROUNDING CONDUCTORS SHALL:
   - A. BE #2 AWG SOLID BARE TINNED COPPER (SBTC) FOR ALL GROUNDING SYSTEM WIRE UNLESS OTHERWISE NOTED, OR OTHERWISE REQUIRED BY CODE.
   - B. BE MINIMUM 12" BEND RADIUS. KEEP NUMBER OF BENDS TO A MINIMUM.
   - C. AVOID LONG BONDING CONNECTION RUNS. MAKE DIRECT AS POSSIBLE.
   - D. NOT HAVE ANY U-SHAPED RUNS.
   - E. BE IN NON-METALLIC CONDUIT ONLY, IF IN CONDUIT.
   - F. BE PLACED THROUGH NON-METALLIC SLEEVES IN FLOORS, WALLS, CEILINGS, ETC.
   - G. PROTECTED IN NON-METALLIC CONDUIT WHERE EXPOSED ABOVE GRADE.

3. INSTALL ALL GROUNDING RINGS AND RADIALS WITH CONDUCTIVE CEMENT, SANKOSHA AS DISTRIBUTED BY ELECTRIC MOTION COMPANY, INC., WINSTED, CT 06098, OR AS SPECIFICALLY INDICATED. INSTALL PER MANUFACTURER'S SPECIFICATIONS.

4. GROUND RINGS SHALL BE:
   - A. MINIMUM 30" BELOW GRADE, OR BELOW FROST LINE WHICHEVER IS DEEPER.
   - B. MINIMUM 2' FROM FOUNDATIONS, FOOTINGS, OTHER GROUNDING SYSTEMS AND ALL CONDUCTIVE OBJECTS.
   - C. WITH MINIMUM 12" BEND RADII.
   - D. WITH ALL CONNECTIONS IN CONTACT WITH EARTH, BONDED BY EXOTHERMIC WELDING.
   - E. BONDED TO A SINGLE POINT GROUND (SPG) WITH A SINGLE WIRE AS INDICATED ON DRAWINGS.

5. GROUND RODS SHALL BE:
   - A. MINIMUM 5/8" DIAMETER.
   - B. MINIMUM 10' LONG.
   - C. COPPER-CLAD GALVANIZED STEEL OR STAINLESS STEEL.
   - D. PLACED IN UNDISTURBED SOIL AND BELOW THE FROST LINE.
   - E. INSTALLED WITH MINIMUM SEPARATION DISTANCE OF TWICE THE DEPTH OF THE ROD(S), OR AS INDICATED ON DRAWINGS.
   - F. MINIMUM TWO (2) RODS ON THE TOWER RING OR ONE (1) PER LEG WHICHEVER IS LARGER, MINIMUM FOUR (4) RODS ON VERY EQUIPMENT BUILDING RING WITH ONE AT EACH CORNER OR AS INDICATED, MINIMUM ONE (1) ROD FOR POWER SERVICE GROUNDING ELECTRODE, AND MINIMUM ONE (1) ROD AT END OF EACH RADIAL.

6. CONDUCTIVE OBJECTS, SUCH AS FENCES, SHALL BE BONDED TO THE GROUNDING SYSTEM IF WITHIN 20' OF THE TOWER GROUNDING SYSTEM, OR 5' OF ANY OTHER GROUNDED COMPONENT.

EQUIPMENT POWER NOTES:

1. 2" CONDUIT W/ (3) #3/0 CU AND (1) #6 AWG G FOR PPC POWER
2. 2" CONDUIT FOR TELCO FEEDER SERVICE TO TELCO SOURCE PER UTILITY
3. 3/4" CONDUICT W/ (2) #12 AWG AND (1) #12 GND FROM TELCO CAB TO 6160
4. 2" CONDUIT W/ (3) 3/0 AWG CU, (1) AWG CU G FOR 6160 POWER AND (2) #12 AWG CU, (1) AWG CU G FOR 6160 GFCI
5. 2" CONDUIT FOR CAT6

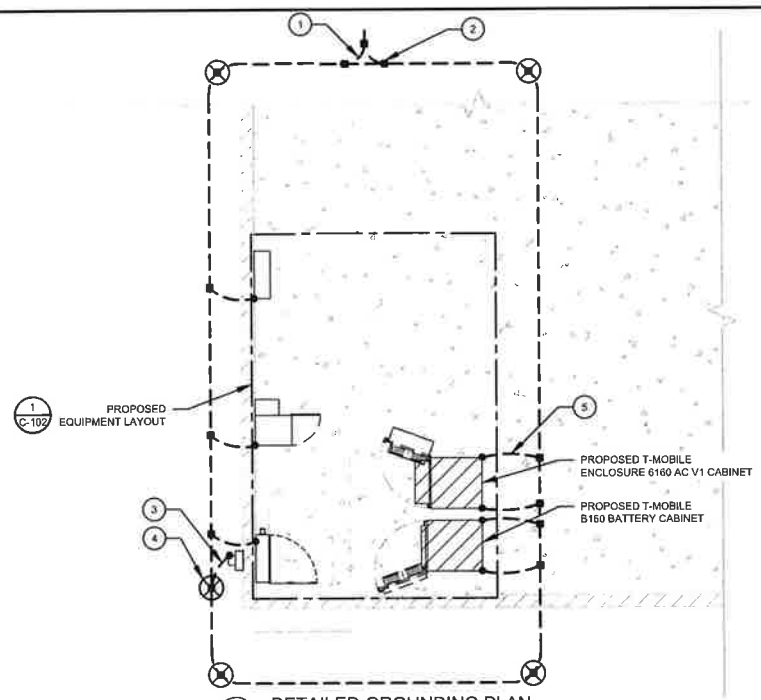

1 DETAILED GROUNDING PLAN
SCALE N T S

GROUNDING PLAN LEGEND:

- EXISTING GROUND WIRE
- GROUND WIRE
- EXOTHERMIC WELD
- MECHANICAL WELD
- 5/8"Ø X 10' COPPER GROUND ROD
- TEST WELL

GROUNDING KEYED NOTES:

1. BOND TO TOWER GROUND RING
2. #2 AWG SBTC BOND FROM TOWER GROUND RING TO EQUIPMENT GROUND RING.
3. EQUIPMENT BOND TO GROUND RING (TYP.)
4. 5/8Ø" X 10 FT GROUND ROD (TYP).
5. BOND PROPOSED EQUIPMENT CABINET PER MANUFACTURER SPECIFICATIONS (TYP)

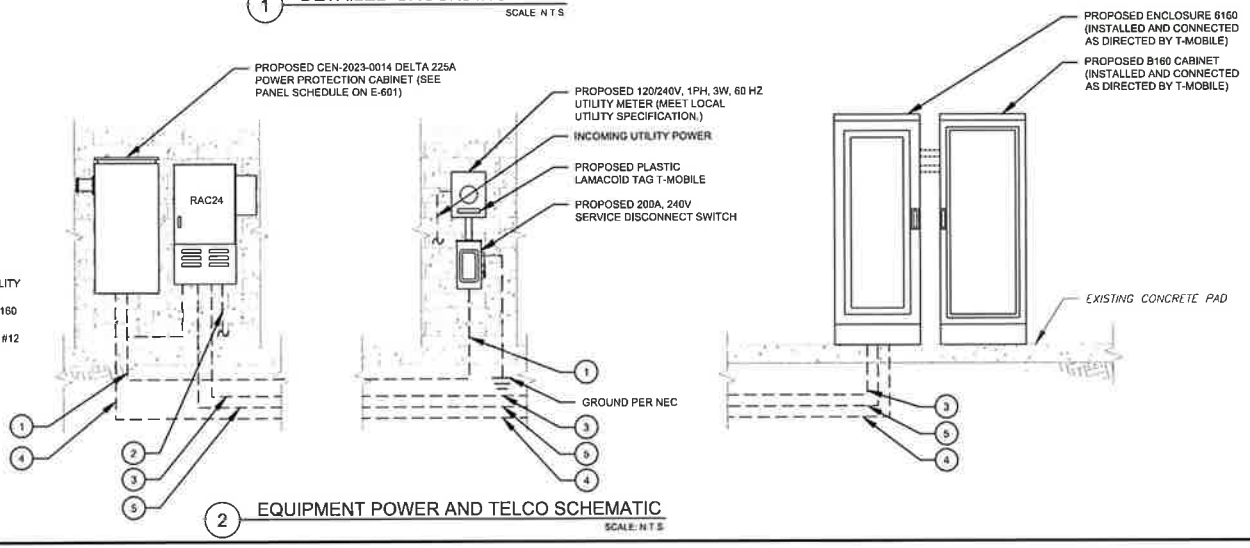

2 EQUIPMENT POWER AND TELCO SCHEMATIC
SCALE: N T S

AMERICAN TOWER®

TOWER ENGINEERING PROFESSIONALS
326 TRYON ROAD
RALEIGH, NC 27603-3530
OFFICE: (919) 661-6351
www.tepgroup.net

REV.	DESCRIPTION	BY	DATE
A	PRELIMINARY	KKP	10/26/23
0	100% CONSTRUCTION	RMJ	11/29/23

ATC SITE NUMBER:
89390

ATC SITE NAME:
WALKER RIDGE

T-MOBILE SITE NAME:
ATC: WALKER RIDGE

SITE ADDRESS:
1135 WATERTROUGH ROAD
CLEARLAKE OAKS, CA 95423-8575

SEAL:

REGISTERED PROFESSIONAL ENGINEER
NIMA JAMASBI
23287
ELECTRICAL
STATE OF CALIFORNIA

11/29/23

T-Mobile

DATE DRAWN:	11/29/23
ATC JOB NO:	14250980
CUSTOMER NAME:	ATC: WALKER RIDGE
CUSTOMER ID:	BA90390A

GROUNDING DETAILS & ELECTRICAL SCHEMATIC

SHEET NUMBER:	REVISION
E-101	0

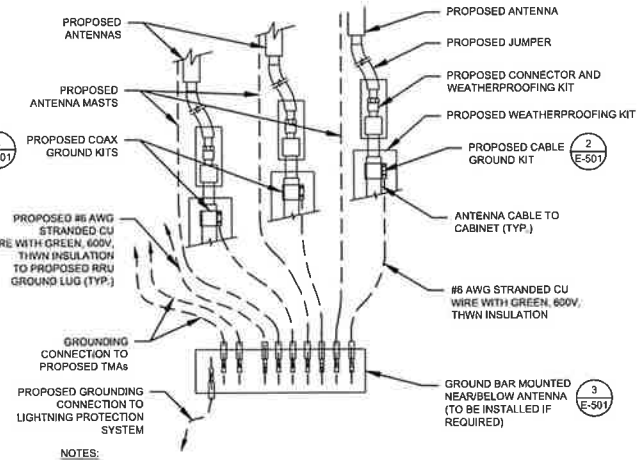

NOTES:

1. THIS DETAIL IS INTENDED TO SHOW THE GENERAL GROUNDING REQUIREMENTS. SLIGHT ADJUSTMENTS MAY BE REQUIRED BASED ON EXISTING SITE CONDITIONS. THE CONTRACTOR SHALL MAKE FIELD ADJUSTMENTS AS NEEDED AND INFORM THE CONSTRUCTION MANAGER OF ANY CONFLICTS.
2. SITE GROUNDING SHALL COMPLY WITH T-MOBILE GROUNDING STANDARDS, LATEST EDITION, AND COMPLY WITH T-MOBILE GROUNDING CHECKLIST, LATEST VERSION. WHEN NATIONAL AND LOCAL GROUNDING CODES ARE MORE STRINGENT THEY SHALL GOVERN.

1 TYPICAL ANTENNA GROUNDING DIAGRAM

SCALE: N.T.S

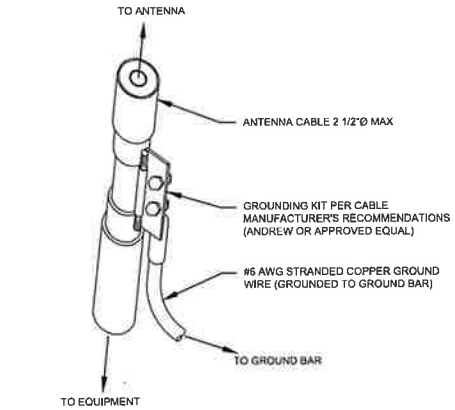

GROUND KIT NOTES

1. DO NOT INSTALL CABLE GROUND KIT AT A BEND AND ALWAYS DIRECT GROUND WIRE DOWN TO GROUND BAR.
2. CONTRACTOR SHALL PROVIDE WEATHERPROOFING KIT (ANDREW PART NUMBER 221213) AND INSTALL/TAPE PER MANUFACTURER'S SPECIFICATIONS.

2 CABLE GROUND KIT CONNECTION DETAIL

SCALE: N.T.S

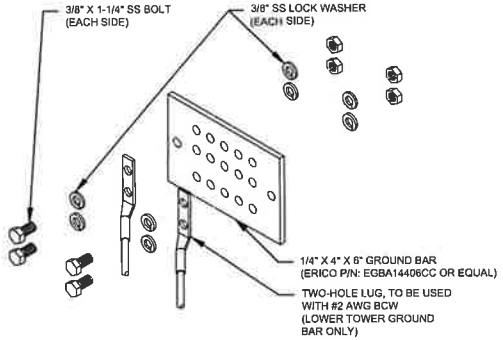

GROUND BAR NOTES:

1. GROUND BAR KITS COME WITH ALL HARDWARE, NUTS, BOLTS, WASHERS, ETC. EXCEPT THE STRUCTURAL MOUNTING MEMBER(S).
2. GROUND BAR TO BE BONDED DIRECTLY TO TOWER.

3 TOWER GROUND BAR DETAIL

SCALE: N.T.S

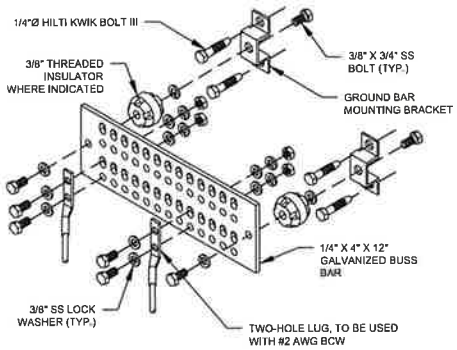

GROUND BAR NOTES.

1. GROUND KITS COME WITH ALL HARDWARE, NUTS, BOLTS, WASHERS, ETC. EXCEPT THE STRUCTURAL MOUNTING MEMBER(S).
2. GROUND BAR SHALL BE BOLTED TO STRUCTURAL MEMBER OR ANCHORED TO CONCRETE SLAB W/ HILTI KWIK BOLT III.

4 MAIN GROUND BAR DETAIL

SCALE: N.T.S

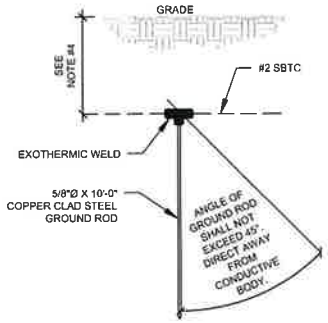

NOTES:

1. SEPARATION DIMENSION TO BE VERIFIED WITH LOCAL UTILITY COMPANY REQUIREMENTS.
2. COORDINATE UTILITY, LOCATE BEFORE DIGGING.
3. CONDUIT TRENCHING DEPTHS AT 36" OR 6" BELOW FROST LINE, WHICHEVER IS GREATER.
4. ALL RING AND RADIAL DEPTHS AT 30" OR 6" BELOW FROST LINE, WHICHEVER IS GREATER.

5 GROUND ROD DETAIL

SCALE: N.T.S

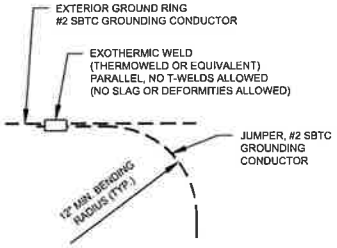

6 TIE CONNECTION DETAIL

SCALE: N.T.S

AMERICAN TOWER®

TOWER ENGINEERING PROFESSIONALS
326 TRYON ROAD
RALEIGH, NC 27603-3530
OFFICE: (919) 661-6351
www.tepgroup.net

REV.	DESCRIPTION	BY	DATE
A	PRELIMINARY	KKP	10/26/23
0	100% CONSTRUCTION	RMJ	11/29/23

ATC SITE NUMBER:
89390

ATC SITE NAME:
WALKER RIDGE

T-MOBILE SITE NAME:
ATC: WALKER RIDGE

SITE ADDRESS:
1135 WATERTROUGH ROAD
CLEARLAKE OAKS, CA 95423-9575

SEAL:

REGISTERED PROFESSIONAL ENGINEER
MARK DUANE BUCH
23287
ELECTRICAL
STATE OF CALIFORNIA

11/29/23

T-Mobile

DATE DRAWN:	11/29/23
ATC JOB NO:	14250980
CUSTOMER NAME:	ATC: WALKER RIDGE
CUSTOMER ID:	BA90390A

GROUNDING DETAILS

SHEET NUMBER: E-501

REVISION: 0

PANEL DESIGNATION:	TMO	TYPE:	LIGHTING & APPLIANCE	SYSTEM	120/240V, 1Ø, 3W, 20 CKT
		MOUNTING:	SURFACE	MAIN BREAKER (MB):	225A MCB
		ENCLOSURE:	NEMA 3R	MAIN BUS RATING:	225A
				MIN. A.I.C. RATING:	22KAIC
LOCATION:	T-MOBILE LEASE AREA				
PANEL NOTES:	DELTA CABINET ELECTRIC SQ D PANEL WITH SW D MANUAL TRANSFER SWITCH INTERCONNECT KIT				

CONNECTED LOAD (KVA) A	CONNECTED LOAD (KVA) B	BRIEF DESCRIPTION	FEEDER OR BRANCH CIRCUIT BREAKER AMPS	BREAKER POLES	CIRCUIT WIRE	CIRCUIT GND	CIRCUIT COND.	POLE NO.	CIRC. NOTES		CIRC. NOTES	POLE NO.	CIRCUIT COND.	CIRCUIT GND	CIRCUIT WIRE	BREAKER POLES	BREAKER AMPS	BRIEF DESCRIPTION	CONNECTED LOAD (KVA) A	CONNECTED LOAD (KVA) B
0.01		SURGE	30	2	#10	#10	3/4"	1				2	1/2"	#12	(2) #12	1	20	RECEPTACLE	0.18	
	0.01							3				4	1/2"	#12	(2) #12	1	20	LIGHT		0.50
0.0		6160 SSC	150	2	3/0	#2	2"	5				6						SPACE	0.00	
	8.02							7				8						SPACE		0.00
8.02								9				10						SPACE	0.00	
	0.0							11				12						SPACE		0.00
0.18		6160 GFI	20	1	(2) #12	#12	3"	13				14						SPACE	0.00	
	0.0	SPACE						15				16						SPACE		0.00
0.0		SPACE						17				18						SPACE	0.00	
	0.0	SPACE						19				20						SPACE		0.00
8.21	8.03								A	B	TOTAL								0.18	0.50
									8.39	8.53	16.92	CONNECTED LOAD (KVA)								
									8.39	8.53	16.92	DEMAND LOAD (kVA)								
								TOTAL LOAD (AMPS)	88.13		21.15	125% DEMAND LOAD (kVA)								

1 PANEL SCHEDULE

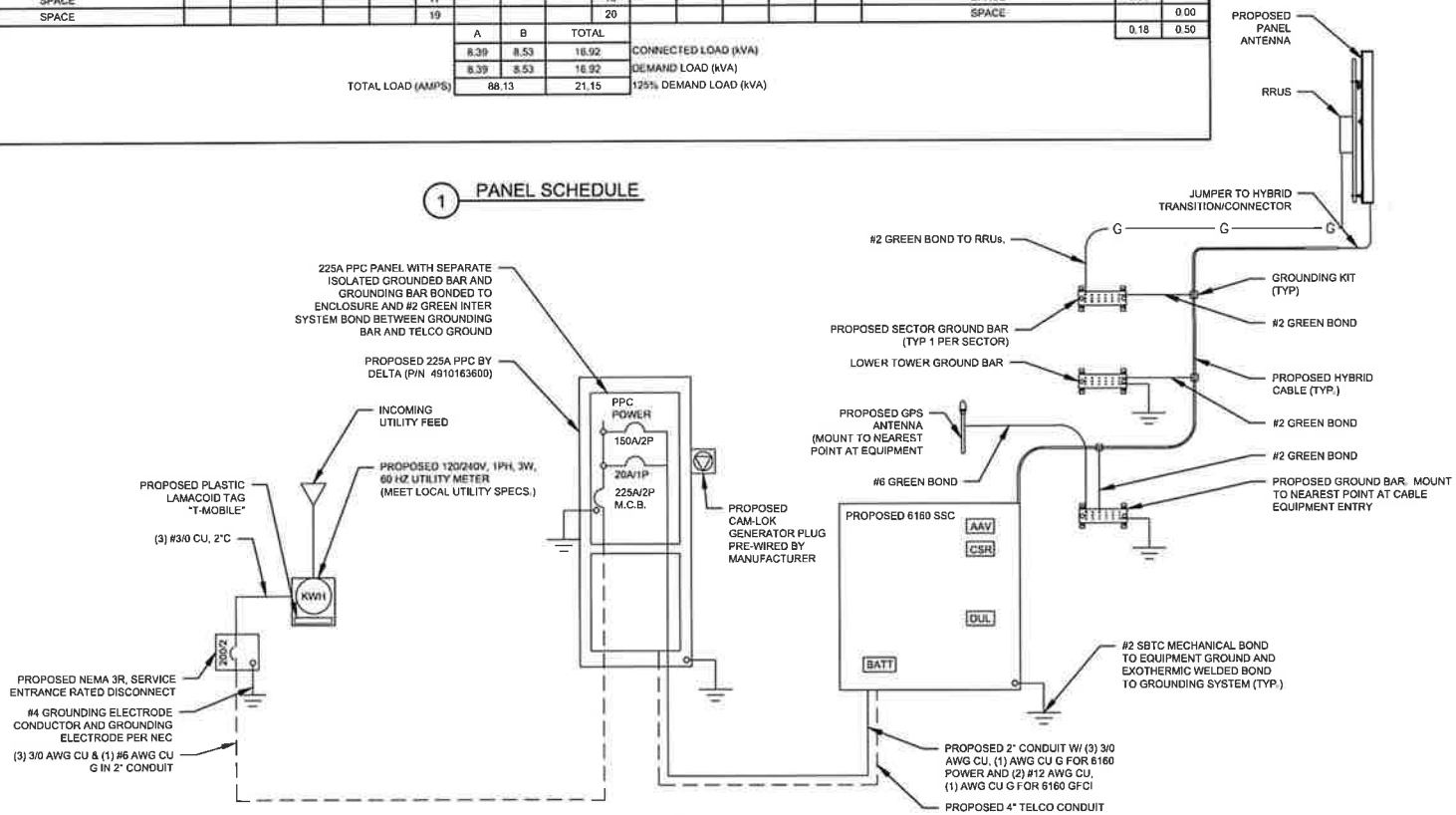

2 ONE-LINE DIAGRAM

AMERICAN TOWER®

TOWER ENGINEERING PROFESSIONALS
326 TRYON ROAD
RALEIGH, NC 27603-3530
OFFICE: (919) 661-6351
www.tepgroup.net

REV.	DESCRIPTION	BY	DATE
A	PRELIMINARY	KKP	10/26/23
0	100% CONSTRUCTION	RMJ	11/29/23

ATC SITE NUMBER:
89390

ATC SITE NAME:
WALKER RIDGE

T-MOBILE SITE NAME:
ATC: WALKER RIDGE

SITE ADDRESS:
1135 WATERTROUGH ROAD
CLEARLAKE OAKS, CA 95423-9579

SEAL:
REGISTERED PROFESSIONAL ENGINEER
KARL GUSTAFSON
23287
ELECTRICAL
STATE OF CALIFORNIA
11/29/23

T-Mobile

DATE DRAWN:	11/29/23
ATC JOB NO.	14250980
CUSTOMER NAME:	ATC: WALKER RIDGE
CUSTOMER ID:	BA90390A

PANEL SCHEDULE & ONE-LINE DIAGRAM

SHEET NUMBER: E-601

REVISION: 0

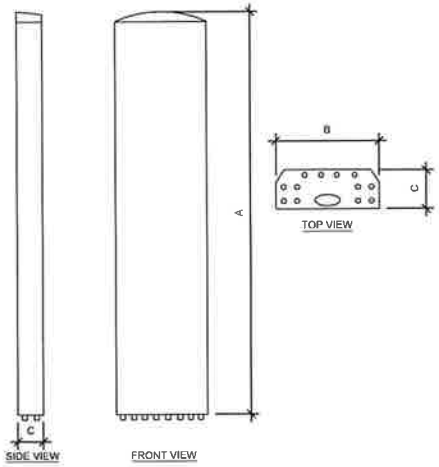

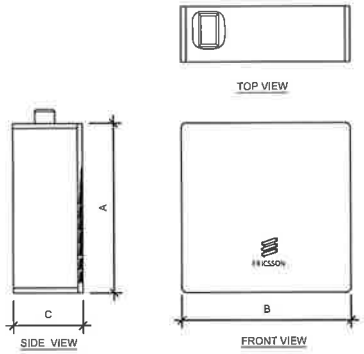

ANTENNA SPECIFICATIONS				
ANTENNA MODEL	A	B	C	WEIGHT (LBS)
AIR 6419 B41	33.6"	20.0"	6.3"	68.5
APXVAALL24 43-U-NA20	95.9"	24.0"	8.5"	122.8

RRU SPECIFICATIONS				
RRU MODEL	A	B	C	WEIGHT (LBS)
RADIO 4460 B25+B66	19.6"	15.7"	12.1"	109.0
RADIO 4480 B71+B85A	21.8"	15.7"	7.5"	84.0

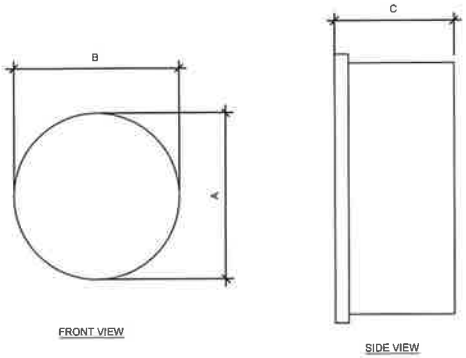

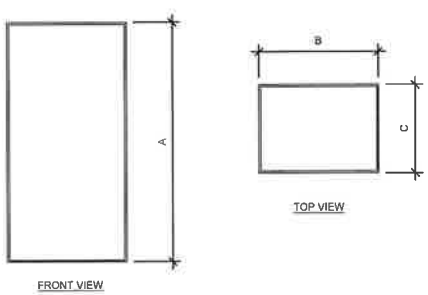

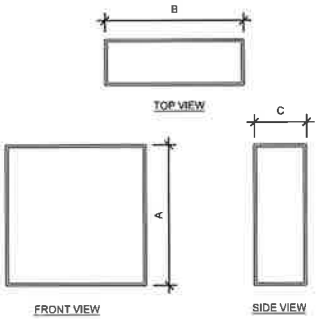

MICROWAVE SPECIFICATIONS				
MICROWAVE MODEL	A	B	C	WEIGHT (LBS)
VHLP3-11W/A	3.27'	3.27'	1.43'	37.4

ODU SPECIFICATIONS				
ODU MODEL	A	B	C	WEIGHT (LBS)
CERAGON RFU-D-HP	12.6"	11.3"	4.2"	26.5

FIBER WINDER BOX SPECIFICATIONS				
WINDER BOX MODEL	A	B	C	WEIGHT (LBS)
WINDER BOX	24.0"	24.0"	8.0"	51.0

- EQUIPMENT SPECIFICATIONS

SCALE: N T S

SUPPLEMENTAL

SHEET NUMBER: R-601

REVISION: -

Existing RAN Equipment
— This section is intentionally blank. —

Proposed RAN Equipment		
Template: 67E5D998E 6160		
Enclosure	1	2
Enclosure Type	Enclosure 6160 AC V1	B160
Baseband	RP 6651: N2500, L2500; RP 6651: N600, N1900, L700, L1900, L2100	
Transport System	CSR IXRe V2 (Gen2)	
Hybrid Cable System	Hybrid Trunk 6/24 4AWG 30m (x3)	

RAN Scope of Work:

Add (1) Enclosure 6160
Add (1) B160
Add (2) RP6651's
Add (1) IXRe
Add (3) Hybrid Cables

67E5D998E_6160_3HCS_octo_6419_NO GSM.png

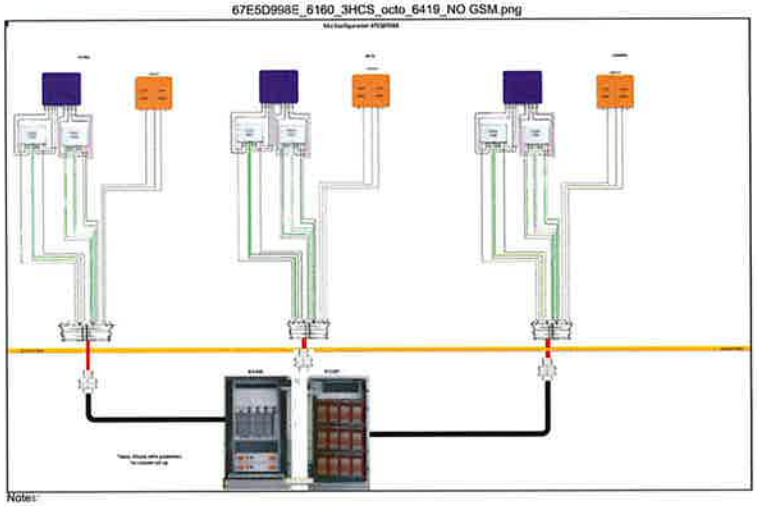

Notes:

1 PROPOSED CABINET CONFIGURATION
SCALE N.T.S.

2 PROPOSED ANTENNA CONFIGURATION
SCALE N.T.S.

NOTE: THIS SHEET WAS CREATED BY OTHERS AND PROVIDED AT THE REQUEST OF THE CUSTOMER WITHOUT EDIT.

SUPPLEMENTAL

SHEET NUMBER: R-602

REVISION: -

Enclosure B160

Enclosure B160
AirCon + VRLA

Enclosure B160
AirCon + Li-Ion

Enclosure B160
Convection Cooling
+ VRLA

Enclosure B160

Capacity
- VRLA 12V: 100Ah / 150Ah / 170Ah / 190Ah / 210Ah
- Li-Ion: 24U 19" / 23"
- Sodium-Nickel: 3x FIAMM

Electrical specification
- DC Output: -48VDC/200A
- Battery breakers: 2x 125/2p
- Alarms: Door open, Climate failure, MCB Connection

Mechanical specification
- Weight: 134kg
- Dimensions: 63 x 26 x 26 in. (Incl. Base frame)
- Base frame height: 6 in.
- Material: Galvanized steel (180g/m²)
- Color: Powder paint NCS 2002-B
- Door: Front access
- Locking type: Pad lock / cylinder

Environmental specification
- Ingress protection: VRLA/Sodium IP44
  Li-Ion IP55
- Relative humidity: 15-100%

Climate system
- Air Conditioner
  - Fan type: DC
  - Cooling capacity: 500W @L35/L35
- Convection cooling
  - Emergency fan

1 PROPOSED ENCLOSURE B160 DETAIL
SCALE: N T S

NOTE: THIS SHEET WAS CREATED BY OTHERS AND PROVIDED AT THE REQUEST OF THE CUSTOMER WITHOUT EDIT.

SUPPLEMENTAL

SHEET NUMBER:	REVISION:
R-603	-

ERICSSON

Enclosure 6160 AC

The Enclosure 6160 is a multi-purpose site cabinet designed to support a multitude of equipment such as ERS Baseband, Transport, Li Ion battery and 3PP vendor equipment. It also provides a highly capable power system and battery back-up - all in a streamlined design and minimized footprint to support cost efficient expansion of mobile broadband.

Being an all-in-one enclosure, the Enclosure 6160 is a very fitting choice for all types of sites where the capacity need is large or room for future expansion is needed. It is ideally used for modernizing existing sites or in greenfield scenarios to match both current and future needs.

With a robust design, IP65 compliance and a sealed Heat Exchanger (HEX) climate system the Enclosure 6160 ensures optimal environmental protection of the active equipment - enabling them for a long-lasting service. The complete system is also integrated and verified for the entire Ericsson Radio System and ensures best-in-class service.

The power system offers 31,5kW of power in total and provides 24kW of -48V DC power for both internal and external consumers.

The equipment space allows 19U of rack space ensuring well enough capacity for existing need and future expansion.

One of the main advantages of the Enclosure 6160 is its default integration with ENM - allowing for advanced remote monitoring and control such a fault management (alarms), inventory management and performance measurements. The cabinet also provides an open O&M interface for integration to 3PP O&M systems.

Preliminary technical specification for Enclosure 6160 AC

CAPACITY	
Rack space user equipment	19U (19" rack)
Hardware capabilities	Power and CPRI support for multi-standard remote radios (RRU or AIR)
	ERS Baseband and Transport units
	Li-Ion batteries
	3PP equipment
	Additional power feed available as option
MECHANICAL SPECIFICATION	
Weight	145 kg (excluding active equipment) 320 lbs (excluding active equipment)
Dimension (H x W x D)	1600 x 650 x 650 mm (incl. Base frame) 63 x 26 x 26 in. (incl. Base frame)
Base frame height	150 mm 6 in.
Mounting position	Ground
Enclosure material	Aluminum
Color	Power paint NCS 2002-B
Door	Front access
Rack type	19" (IEC 60297-3-100)
Locking type	Pad lock or Cylinder
POWER SYSTEM	
Input voltage	3P+N+PE: 346/200-415/240 VAC 2P+N+PE: 208/120-220/127 VAC 1P+N+PE: 200-250 VAC
Input power	<33kW
Output load (-48VDC)	24kW
Total capacity (-48VDC)	31.5kW
AC SPD	Class 2/Type 2
DC SPD	Class 2/Type 2
PSU Slots	9x
Service outlet	Optional
Priority load	8x Circuit Breaker
LLVD 1	6x Circuit Breaker
LLVD 2	6x Circuit Breaker
CB ratings	3A / 5A / 10A / 15A / 20A / 25A / 30A / 40A / 50A / 60A / 80A / 100A
Battery Interface	2x Circuit Breaker
Battery Circuit Breaker rating	125A 2pol (200A)
PSU capacity	3500W

1 PROPOSED ENCLOSURE 6160 AC V1 DETAIL
SCALE: N.T.S.

NOTE: THIS SHEET WAS CREATED BY OTHERS AND PROVIDED AT THE REQUEST OF THE CUSTOMER WITHOUT EDIT.

SUPPLEMENTAL

SHEET NUMBER:	REVISION
R-604	-

MANUFACTURER: NOKIA
MODEL: IXR-e
DIMENSIONS: 17.25"x10.0"x1.75"
WEIGHT: TBD

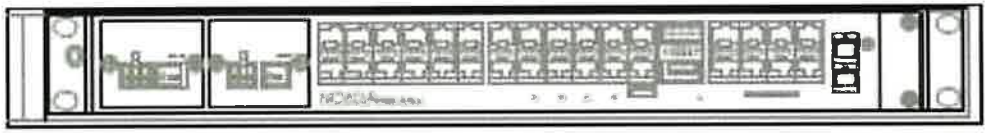

1 PROPOSED CSR IXRE V2 DETAIL
SCALE: N.T.S.

MANUFACTURER:		ERICSON
MODEL NO.:		RP 6651
DIMENSIONS:		TOTAL WEIGHT:
	1.75"	
	19"	16.53 LBS (7.5 KG)
	13.85"	

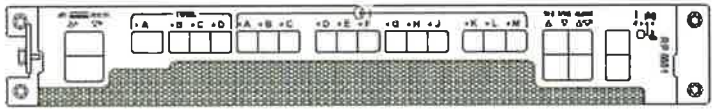

2 PROPOSED RP6651 DETAIL
SCALE: N.T.S.

NOTE: THIS SHEET WAS CREATED BY OTHERS AND PROVIDED AT THE REQUEST OF THE CUSTOMER WITHOUT EDIT.

SUPPLEMENTAL

SHEET NUMBER:	REVISION
R-605	-

VHLP3-11W/A

0.9m | 3 ft ValuLine® High Performance Low Profile Antenna, single-polarized, 10.125–11.700 GHz

Product Classification

Product Type	Microwave antenna
Product Brand	ValuLine®

General Specifications

Antenna Type	VHLP - ValuLine® High Performance Low Profile Antenna, single-polarized
Polarization	Single
Side Struts, Included	0
Side Struts, Optional	1 inboard

Dimensions

Diameter, nominal	0.9 m | 3 ft

COMMSCOPE®

VHLP3-11W/A

Antenna Dimensions and Mounting Information

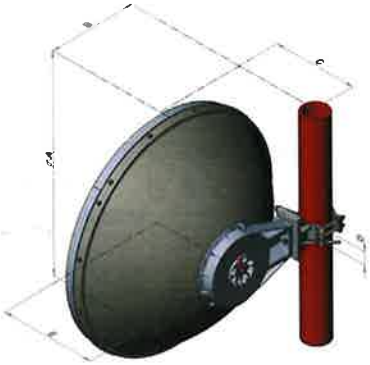

Dimension in inches (mm)					
Antenna size, ft (m)	A	B	C	D	E
3 (1.0)	39.3 (999)	16 (407)	15.2 (387)	2.4 (60)	17.2 (437)

Electrical Specifications

Operating Frequency Band	10.125 – 11.700 GHz
Gain, Low Band	37.8 dBi
Gain, Mid Band	38.4 dBi
Gain, Top Band	39 dBi
Boresite Cross Polarization Discrimination (XPD)	30 dB
Front-to-Back Ratio	64 dB
Beamwidth, Horizontal	2 °
Beamwidth, Vertical	2 °
Return Loss	17.7 dB

COMMSCOPE®

1 PROPOSED VHLP3-11W/A DETAIL
SCALE: N.T.S

NOTE: THIS SHEET WAS CREATED BY OTHERS AND PROVIDED AT THE REQUEST OF THE CUSTOMER WITHOUT EDIT.

SUPPLEMENTAL

SHEET NUMBER:	REVISION:
R-606	-

Ceragon RFU-D & RFU-D-HP ODU Specs

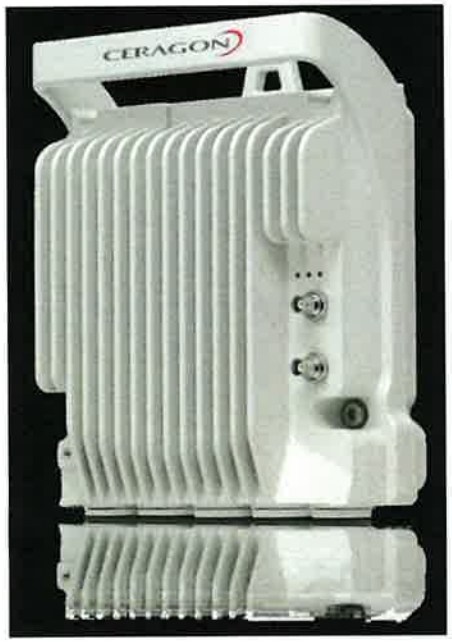

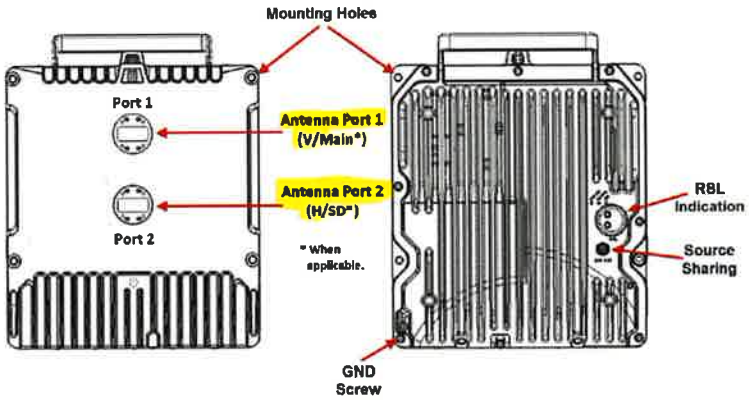

Table 178: RFU-D Mechanical Specifications (including diplexer unit)

RFU-D Dimensions	Height: 9.05 inches Width: 9.17 inches Depth: 3.85 inches Weight: 14.33 lbs.

Table 179: RFU-D-HP Mechanical Specifications (including diplexer or OCU unit)

RFU-D-HP Dimensions	Height: 12.56 inches Width: 11.26 inches Depth: 4.21 inches Weight: 26.5 lbs.

1 PROPOSED RFU-D-HP ODU DETAIL
SCALE: N.T.S.

NOTE: THIS SHEET WAS CREATED BY OTHERS AND PROVIDED AT THE REQUEST OF THE CUSTOMER WITHOUT EDIT.

SUPPLEMENTAL

SHEET NUMBER: R-607

REVISION: -

NSB 190FT RED

The NSB RED Battery® delivers long life for reliable and unreliable grid conditions.

- Pure lead electrochemistry greatly increases temp and corrosion resistance, while reducing component aging
- Thin plates deliver large surface area, high power density and low resistance
- Design life 15+ years at 20°C (68°F)
- EUROBAT design life definition: Very Long Life (12+ years)
- Fast recharging
- Operating temperature range -40°C to +60°C (-40°F to 140°F)
- State of the art automated manufacturing ensures consistency and reliability
- Shelf life of up to 24 months
- Advanced 3 stage terminal design to ensure leak-free operation - brass terminals provide maximum performance
- High modulus Polyphenylene Oxide (PPO) plastic materials designed to withstand extended elevated operating temperatures and maintain high battery compression essential for reliable operation
- Non-halogenated, thermally sealed plastic casing
- Flame retardant (UL 94 V0) and LOI of at least 28%
- Approved as non-hazardous cargo for ground, sea, and air transport - DOT 49CFR173.159(d), (i) and (n)

Release date: 2017-10-06

northstarbattery.com

NSB 190FT RED

Nominal Technical Specifications

Dimensions

Height	12.6 in	Width	3.9 in
Length	20 in	Weight	123 lbs

Electrical

Terminal	Female M6 x 1.25
Terminal torque	8.0 Nm (71 in lbs)
1 hr capacity to 1.70VPC @ 20/25°C (68/77°F)	123 / 134 Ah
3 hr capacity to 1.75VPC @ 20/25°C (68/77°F)	160 / 164 Ah
5 hr capacity to 1.79VPC @ 20/25°C (68/77°F)	183 / 186 Ah
10 hr capacity to 1.81VPC @ 20/25°C (68/77°F)	187 / 190 Ah
Float voltage @ 20/25°C (68/77°F)	2.28 / 2.27 VPC
Impedance (Ohms)	2.6 mΩ @ 25°C (77°F)
Conductance	1900 S
Short circuit current	5000 A
Operation temperature range	-40°C to +60°C
Nominal voltage	12 V

Technical Drawing

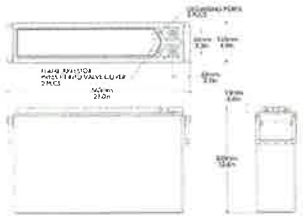

All NorthStar batteries are manufactured with Tesoro's SHO28 (IEC 60896-11) Grade G163 Conc. Issue 1 British, German and Russian transitions UL approved and ISO9001 certified. NorthStar is registered to ISO9001 and ISO 14001

Revision date: 2017-10-06

1 PROPOSED NSB 190FT BATTERY DETAIL

SCALE: N.T.S

NOTE: THIS SHEET WAS CREATED BY OTHERS AND PROVIDED AT THE REQUEST OF THE CUSTOMER WITHOUT EDIT.

SUPPLEMENTAL

SHEET NUMBER:	REVISION
R-608	-